Sales Code: LOP407 **Barcode:** 5056211818281 **Brand:** Old London **Description:** Old London 1800mm Timeless Sand MDF Vinyl Straight Front Bath Panel



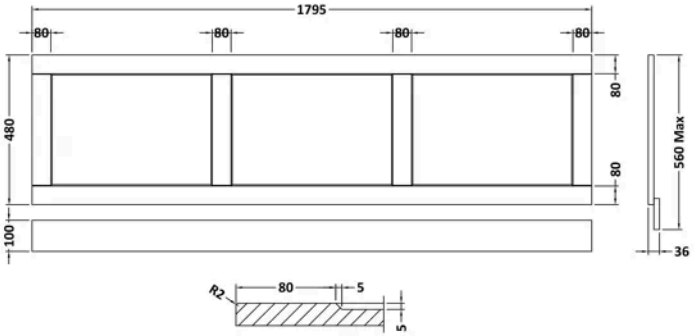

Product Dimensions

Product	560 x 1795 x 36mm (H x W x D)
Packaged	610 x 1830 x 28mm (H x W x D)
Nett Weight	14 kg
Packaged Weight	14.5 kg

Packaging Details

Box Qty	1

Product Details

Country of Origin	Republic of Ireland
Product Material	Mdf Vinyl Textured Woodgrain
Colour/Finish	Timeless Sand
Style	Traditional
Fixings Included	Yes
Bath Panel Shape	Straight
Bath Panel Type	Front Panel
Fsc Certified	Yes

© ROXOR Group