Sales Code: LON804 **Barcode:** 5056462622750 **Brand:** Old London **Description:** Old London 750mm Hunter Green 3 Door Floor Standing Vanity Unit



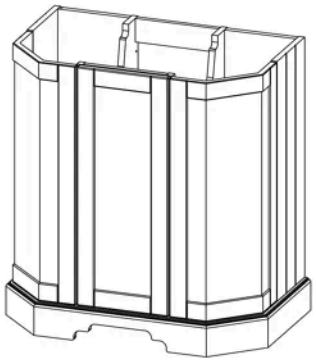

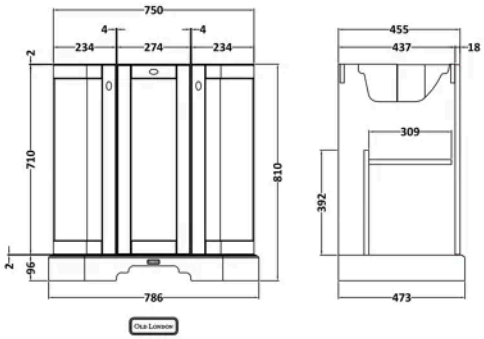

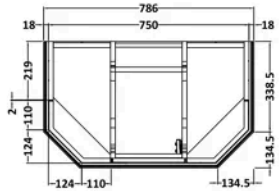

Product Dimensions

Product	810 x 786 x 471mm (H x W x D)
Packaged	851 x 854 x 511mm (H x W x D)
Nett Weight	32.5 kg
Packaged Weight	33 kg

Packaging Details

Box Qty	1

Product Details

Country of Origin	Republic of Ireland
Product Material	Mdf Vinyl Smooth Matt
Colour/Finish	Hunter Green
Mount Type	Floor
Style	Traditional
Handle Type	Knob
Construction Method	Cam & Wood Dowel
Construction Type	Rigid
Fascia Finish	Mdf Vinyl Smooth Matt
Handles Included	Yes
Material Thickness	18 mm
No. Doors	3
No. Shelves	1
Number Of Shelves	1
Waste Shroud	No

© ROXOR Group