Sales Code: LON417 **Barcode:** 5056211818199 **Brand:** Old London **Description:** Old London 1050mm Timeless Sand Wall Hung Mirror Cabinet



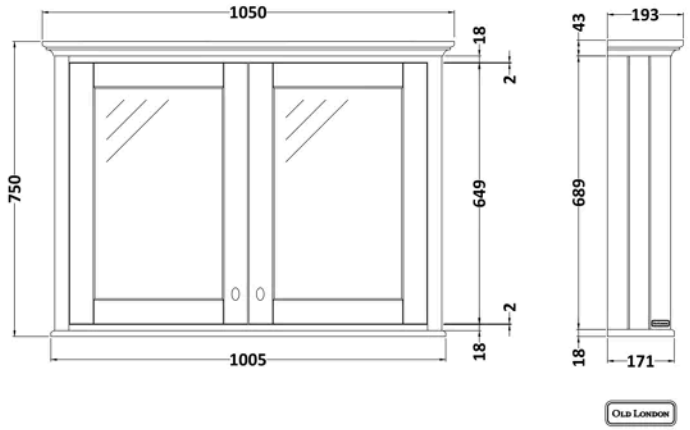

Product Dimensions

Product	752 x 1050 x 193mm (H x W x D)
Packaged	777 x 1080 x 223mm (H x W x D)
Nett Weight	37.5 kg
Packaged Weight	38 kg

Packaging Details

Box Qty	1

Product Details

Country of Origin	Republic of Ireland
Product Material	Mdf Vinyl Textured Woodgrain
Colour/Finish	Timeless Sand
Mount Type	Wall Hung
Style	Traditional
Handle Type	Knob
Fixings Included	Yes
Construction Method	Cam & Wood Dowel
Construction Type	Rigid
Fascia Finish	Mdf Vinyl Textured Woodgrain
Fsc Certified	Yes
Handles Included	Yes
Leg Set Included	No
Material Thickness	18 mm
No. Doors	2
No. Shelves	1
Number Of Shelves	1

© ROXOR Group