Sales Code: LON413 **Barcode:** 5056211818137 **Brand:** Old London **Description:** Old London 600 x 694mm Woodgrain Rectangular Timeless Sand Bathroom Mirror



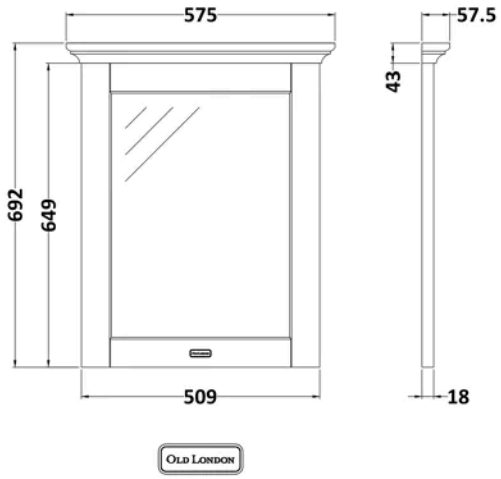

Product Dimensions

Product	694 x 600 x 68mm (H x W x D)
Packaged	724 x 615 x 90mm (H x W x D)
Nett Weight	5.3 kg
Packaged Weight	5.8 kg

Packaging Details

Box Qty	1

Product Details

Country of Origin	Republic of Ireland
Product Material	Mdf Vinyl Textured Woodgrain
Colour/Finish	Timeless Sand
Mount Type	Wall Hung
Style	Traditional
Fixings Included	Yes
Frame Finish	Woodgrain

© ROXOR Group