Sales Code: LON309 **Barcode:** 5056211818069 **Brand:** Old London **Description:** Old London 1200mm Twilight Blue 4 Door Floor Standing Vanity Unit



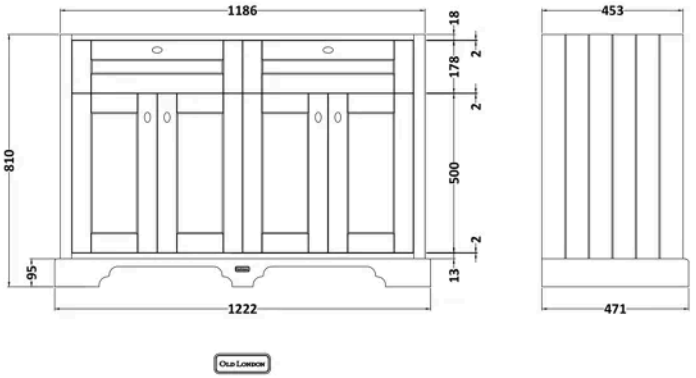

Product Dimensions

Product	810 x 1222 x 473mm (H x W x D)
Packaged	840 x 1252 x 511mm (H x W x D)
Nett Weight	56.5 kg
Packaged Weight	57 kg

Packaging Details

Box Qty	1

Product Details

Country of Origin	Republic of Ireland
Product Material	Mdf Vinyl Textured Woodgrain
Colour/Finish	Twilight Blue
Mount Type	Floor
Style	Traditional
Handle Type	Knob
Construction Method	Cam & Wood Dowel
Construction Type	Rigid
Fascia Finish	Mdf Vinyl Textured Woodgrain
Handles Included	Yes
Material Thickness	18 mm
No. Doors	4
No. Shelves	1
Number Of Shelves	1
Waste Shroud	No

© ROXOR Group