Sales Code: LOM274 **Barcode:** 5056211871569 **Brand:** Old London **Description:** Old London 3 Tap Hole 1000mm Grey Angled Single Bowl Marble Top Basin



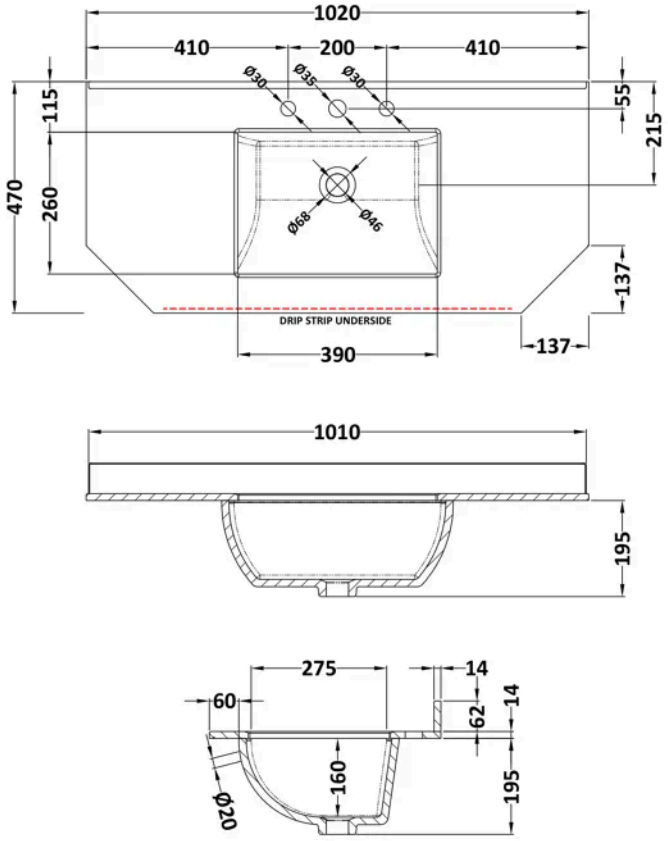

Product Dimensions

Product	268 x 1020 x 470mm (H x W x D)
Packaged	250 x 1100 x 580mm (H x W x D)
Nett Weight	19.5 kg
Packaged Weight	20 kg

Packaging Details

Box Qty	1

Product Details

Country of Origin	China
Product Material	Vitreous China
Colour/Finish	Grey

© ROXOR Group