Sales Code: LOM263 **Barcode:** 5056211871675 **Brand:** Old London **Description:** Old London 1 Tap Hole 750mm Black Angled Single Bowl Marble Top Basin



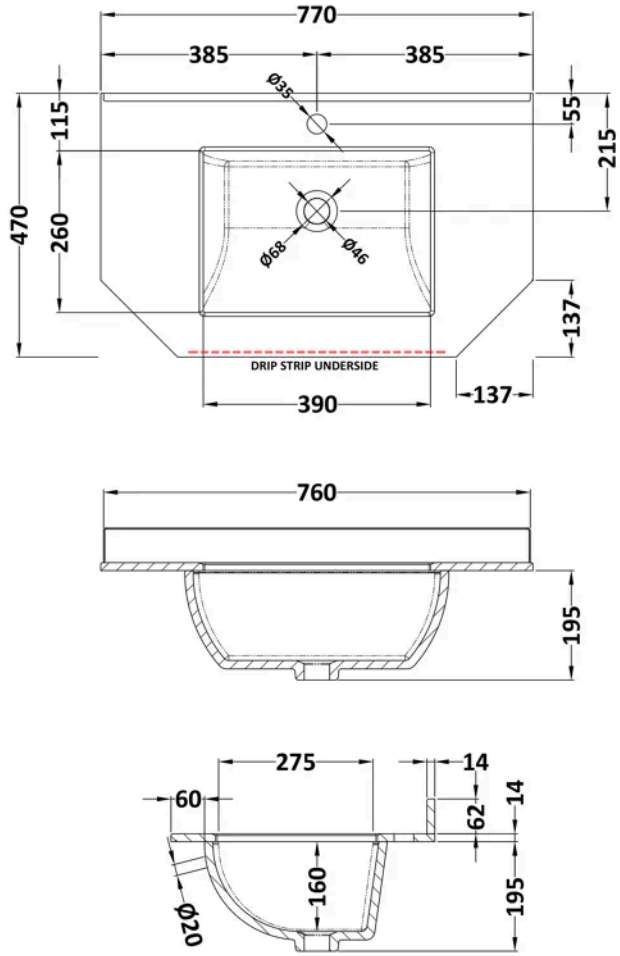

Product Dimensions

Product	268 x 770 x 470mm (H x W x D)
Packaged	250 x 860 x 580mm (H x W x D)
Nett Weight	18 kg
Packaged Weight	18.5 kg

Packaging Details

Box Qty	1

Product Details

Country of Origin	China
Product Material	Vitreous China
Colour/Finish	Black

© ROXOR Group