**Sales Code:** LOM249 **Barcode:** 5056211825777 **Brand:** Old London **Description:** Old London 3 Tap Hole 1000mm White Single Bowl Marble Top Basin



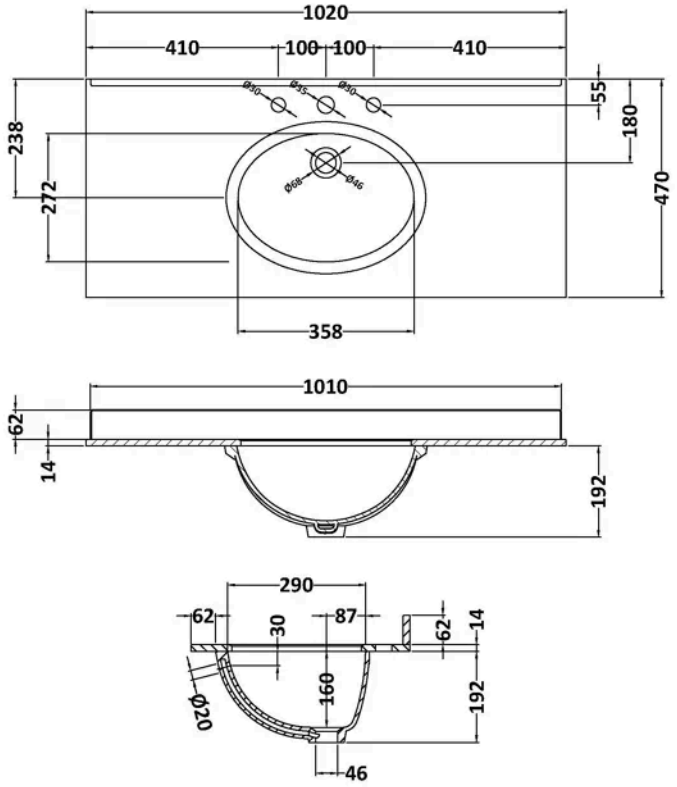


## Product Dimensions

| | |
|---|---|
| Product | 268 x 1020 x 470mm (H x W x D) |
| Packaged | 250 x 1100 x 580mm (H x W x D) |
| Nett Weight | 18 kg |
| Packaged Weight | 18.5 kg |

## Packaging Details

| | |
|---|---|
| Box Qty | 1 |

## Product Details

| | |
|---|---|
| Country of Origin | China |
| Product Material | Vitreous China |
| Colour/Finish | White |
| Inner Bowl Height | 160 mm |
| No. Of Tapholes | 3 |
| Number Of Bowls | 1 |

© ROXOR Group