Sales Code: LOF837

Barcode: 5056462646794

Brand: Old London

Description: Old London 1000mm Hunter Green 2 Door Floor Standing Cabinet With 3 Tap Holes Basin



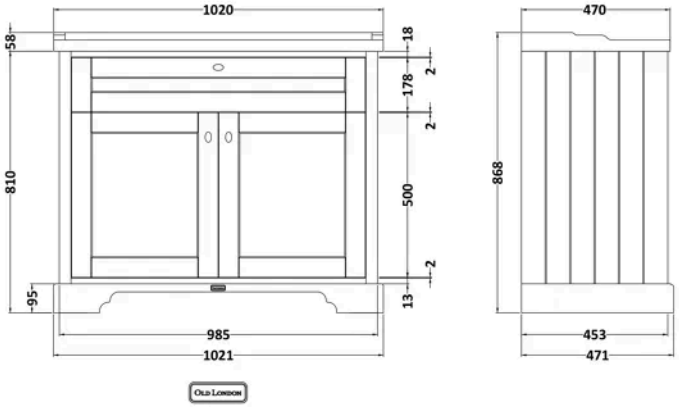

Product Dimensions

Product	868 x 1020 x 470mm (H x W x D)
Packaged	850 x 1055 x 510mm (H x W x D)
Nett Weight	68 kg
Packaged Weight	68.5 kg

Product Details

Country of Origin	Republic of Ireland
Product Material	Mdf Vinyl Smooth Matt
Colour/Finish	Hunter Green
Mount Type	Floor
Style	Traditional
Handle Type	Knob
Construction Method	Cam & Wood Dowel
Construction Type	Rigid
Fascia Finish	Mdf Vinyl Smooth Matt
Fsc Certified	Yes
Handles Included	Yes
Inner Bowl Height	160 mm
Material Thickness	18 mm
No. Doors	2
No. Of Tapholes	3
No. Shelves	1
Number Of Bowls	1
Number Of Shelves	1
Overflow Cover Included	No
Overflow Included	No
Tap Included	No
Waste Included	No
Waste Shroud	No

© ROXOR Group

Sales Code: LON807 **Barcode:** 5056462622712 **Brand:** Old London **Description:** Old London 1000mm Hunter Green 2 Door Floor Standing Vanity Unit



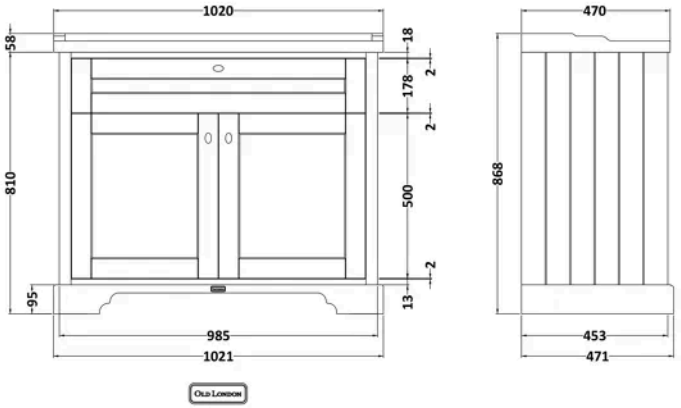

Product Dimensions

Product	810 x 1021 x 473mm (H x W x D)
Packaged	850 x 1055 x 510mm (H x W x D)
Nett Weight	42.5 kg
Packaged Weight	43.5 kg

Packaging Details

Box Qty	1

Product Details

Country of Origin	Republic of Ireland
Product Material	Mdf Vinyl Smooth Matt
Colour/Finish	Hunter Green
Mount Type	Floor
Style	Traditional
Handle Type	Knob
Construction Method	Cam & Wood Dowel
Construction Type	Rigid
Fascia Finish	Mdf Vinyl Smooth Matt
Handles Included	Yes
Material Thickness	18 mm
No. Doors	2
No. Shelves	1
Number Of Shelves	1
Waste Shroud	No

© ROXOR Group

Sales Code: NLV037 **Barcode:** 5056211825722 **Brand:** nuie **Description:** 3 Tap Hole 1000mm Traditional Ceramic Basin



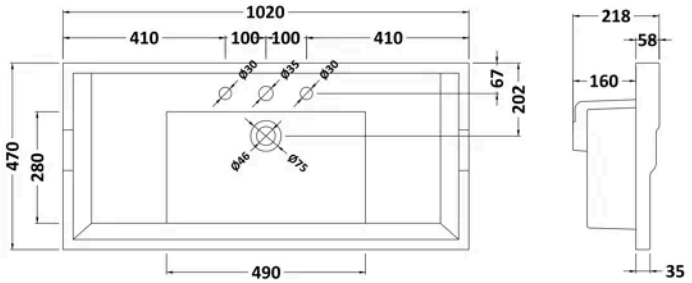

Product Dimensions

Product	218 x 1020 x 470mm (H x W x D)
Packaged	260 x 1020 x 480mm (H x W x D)
Nett Weight	26 kg
Packaged Weight	27 kg

Packaging Details

Box Qty	1

Product Details

Country of Origin	China
Product Material	Vitreous China
Colour/Finish	White
Ce Certified	Yes
Inner Bowl Height	160 mm
No. Of Tapholes	3
Number Of Bowls	1

© ROXOR Group