**Sales Code:** LOF836

**Barcode:** 5056678418222

**Brand:** Old London

**Description:** Old London Hunter Green 800mm 2 Door Floor Standing Vanity Unit With 3 Tap Holes Basin



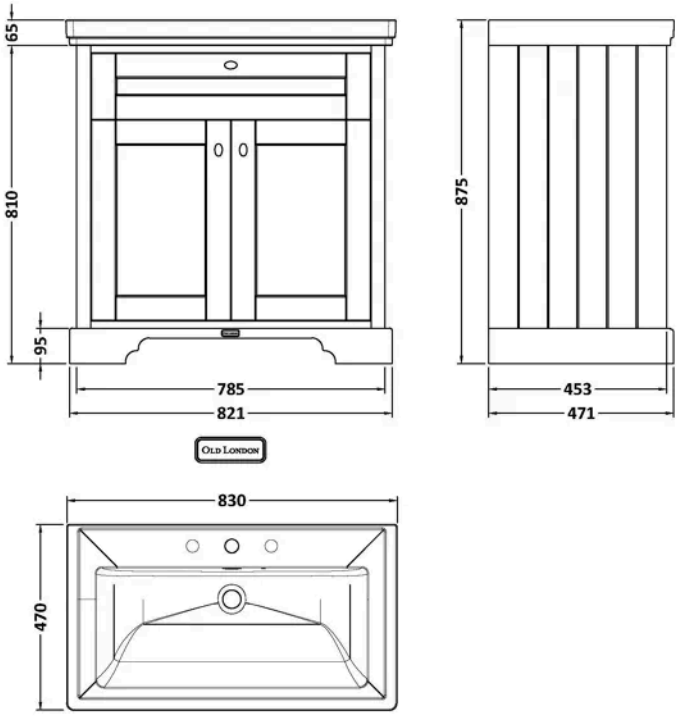


## Product Dimensions

| | |
|---|---|
| Product | 875 x 830 x 471mm (H x W x D) |
| Packaged | 550 x 550 x 550mm (H x W x D) |
| Nett Weight | 56.5 kg |
| Packaged Weight | 57 kg |

## Product Details

| | |
|---|---|
| Country of Origin | Republic of Ireland |
| Product Material | Mdf Vinyl Smooth Matt |
| Colour/Finish | Hunter Green |
| Mount Type | Floor |
| Style | Traditional |
| Handle Type | Knob |
| Construction Method | Cam & Wood Dowel |
| Construction Type | Rigid |
| Fascia Finish | Mdf Vinyl Smooth Matt |
| Fsc Certified | Yes |
| Handles Included | Yes |
| Inner Bowl Height | 134 mm |
| Material Thickness | 18 mm |
| No. Doors | 2 |
| No. Of Tapholes | 3 |
| No. Shelves | 1 |
| Number Of Bowls | 1 |
| Number Of Shelves | 1 |
| Overflow Cover Included | No |
| Overflow Included | No |
| Tap Included | No |
| Waste Included | No |
| Waste Shroud | No |

© ROXOR Group

**Sales Code:** CBM535 **Barcode:** 5056462643687 **Brand:** nuie **Description:** 3 Tap Hole 800mm Traditional Fireclay Basin



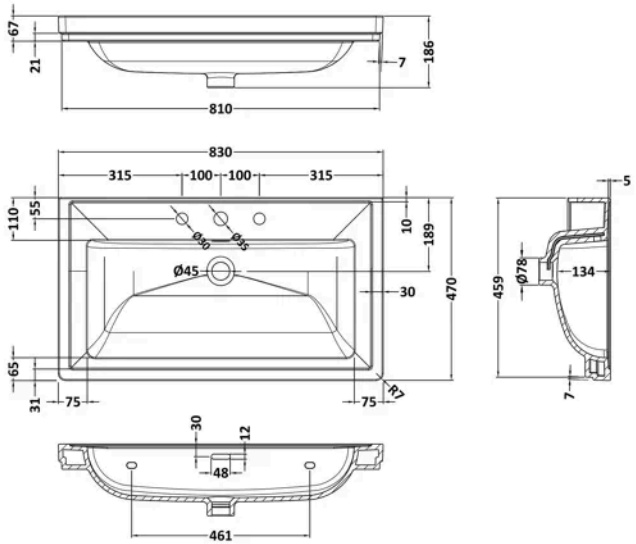


## Product Dimensions

| | |
|---|---|
| Product | 186 x 830 x 470mm (H x W x D) |
| Packaged | 490 x 850 x 220mm (H x W x D) |
| Nett Weight | 21.5 kg |
| Packaged Weight | 21.5 kg |

## Packaging Details

| | |
|---|---|
| Box Qty | 1 |
| Label Size (mm) | 50 x 100 |
| Label Colour | White |
| Label Qty | 2.0000 |

## Product Details

| | |
|---|---|
| Country of Origin | United Arab Emirates |
| Product Material | Fireclay |
| Colour/Finish | White |
| Style | Contemporary |
| Bottle Trap Included | No |
| Ce Certified | Yes |
| Inner Bowl Depth | 295 mm |
| Inner Bowl Height | 134 mm |
| Inner Bowl Width | 680 mm |
| No. Of Tapholes | 3 |
| Number Of Bowls | 1 |
| Overflow Cover Included | No |
| Overflow Included | Yes |
| Tap Included | No |
| Waste Included | No |

© ROXOR Group

**Sales Code:** LON805 **Barcode:** 5056462622705 **Brand:** Old London **Description:** Old London 800mm Hunter Green 2 Door Floor Standing Vanity Unit



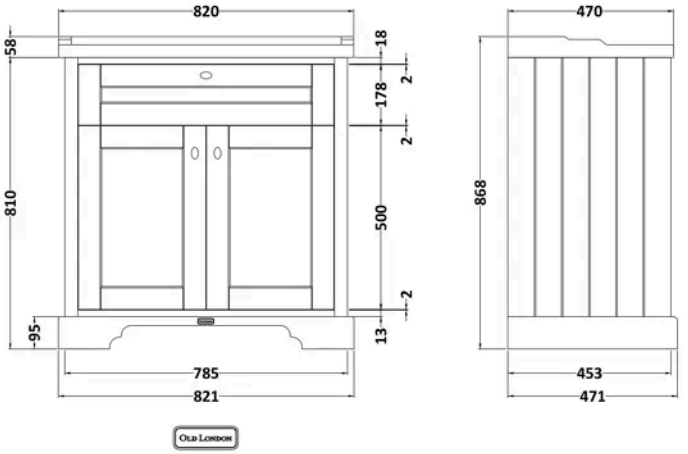


## Product Dimensions

| | |
|---|---|
| Product | 810 x 821 x 473mm (H x W x D) |
| Packaged | 851 x 854 x 511mm (H x W x D) |
| Nett Weight | 35.5 kg |
| Packaged Weight | 36 kg |

## Packaging Details

| | |
|---|---|
| Box Qty | 1 |

## Product Details

| | |
|---|---|
| Country of Origin | Republic of Ireland |
| Product Material | Mdf Vinyl Smooth Matt |
| Colour/Finish | Hunter Green |
| Mount Type | Floor |
| Style | Traditional |
| Handle Type | Knob |
| Construction Method | Cam & Wood Dowel |
| Construction Type | Rigid |
| Fascia Finish | Mdf Vinyl Smooth Matt |
| Handles Included | Yes |
| Material Thickness | 18 mm |
| No. Doors | 2 |
| No. Shelves | 1 |
| Number Of Shelves | 1 |
| Waste Shroud | No |

© ROXOR Group