Sales Code: LOF830

Barcode: 5056462646749

Brand: Old London

Description: Old London 800mm Hunter Green 2 Door Floor Standing Cabinet With 3 Tap Holes Marble Basin



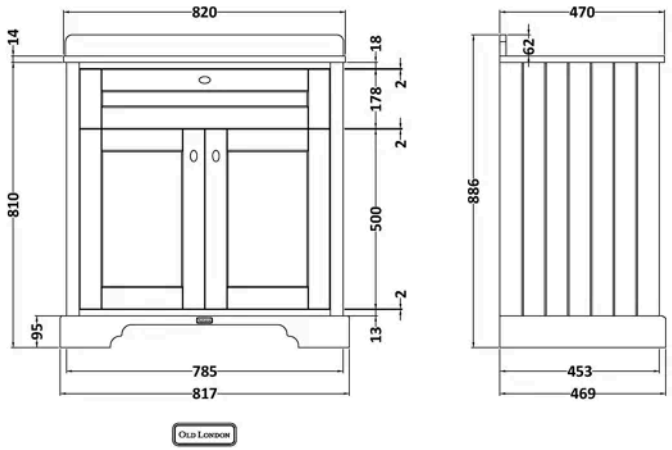

Product Dimensions

Product	886 x 820 x 470mm (H x W x D)
Packaged	851 x 854 x 511mm (H x W x D)
Nett Weight	53 kg
Packaged Weight	53.5 kg

Product Details

Country of Origin	Republic of Ireland
Product Material	Mdf Vinyl Smooth Matt
Colour/Finish	Hunter Green
Mount Type	Floor
Style	Traditional
Handle Type	Knob
Construction Method	Cam & Wood Dowel
Construction Type	Rigid
Fascia Finish	Mdf Vinyl Smooth Matt
Fsc Certified	Yes
Handles Included	Yes
Inner Bowl Height	160 mm
Material Thickness	18 mm
No. Doors	2
No. Of Tapholes	3
No. Shelves	1
Number Of Bowls	1
Number Of Shelves	1
Overflow Cover Included	No
Overflow Included	No
Tap Included	No
Waste Included	No
Waste Shroud	No

© ROXOR Group

Sales Code: LOM230 **Barcode:** 5056211819059 **Brand:** Old London **Description:** Old London 3 Tap Hole 800mm Black Single Bowl Marble Top Basin



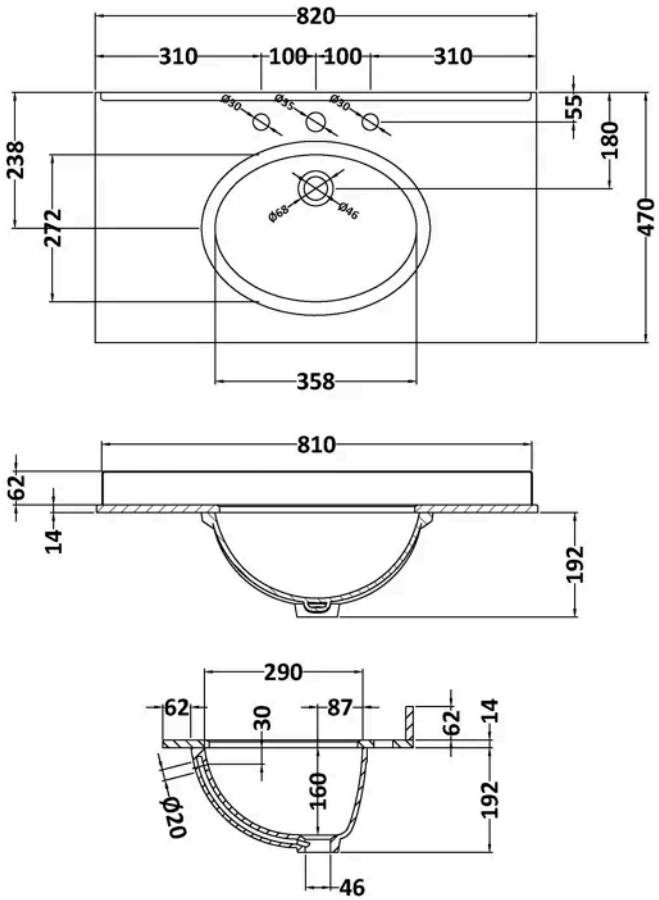

Product Dimensions

Product	268 x 820 x 463mm (H x W x D)
Packaged	310 x 900 x 550mm (H x W x D)
Nett Weight	18 kg
Packaged Weight	18.5 kg

Packaging Details

Box Qty	1

Product Details

Country of Origin	China
Product Material	Vitreous China
Colour/Finish	Black
Inner Bowl Height	160 mm
No. Of Tapholes	3
Number Of Bowls	1

© ROXOR Group

Sales Code: LON805 **Barcode:** 5056462622705 **Brand:** Old London **Description:** Old London 800mm Hunter Green 2 Door Floor Standing Vanity Unit



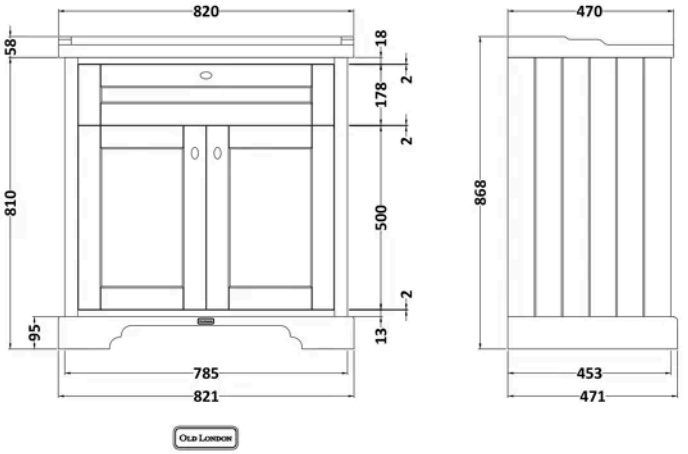

Product Dimensions

Product	810 x 821 x 473mm (H x W x D)
Packaged	851 x 854 x 511mm (H x W x D)
Nett Weight	35.5 kg
Packaged Weight	36 kg

Packaging Details

Box Qty	1

Product Details

Country of Origin	Republic of Ireland
Product Material	Mdf Vinyl Smooth Matt
Colour/Finish	Hunter Green
Mount Type	Floor
Style	Traditional
Handle Type	Knob
Construction Method	Cam & Wood Dowel
Construction Type	Rigid
Fascia Finish	Mdf Vinyl Smooth Matt
Handles Included	Yes
Material Thickness	18 mm
No. Doors	2
No. Shelves	1
Number Of Shelves	1
Waste Shroud	No

© ROXOR Group