Sales Code: LOF813

Barcode: 5056462646596

Brand: Old London

Description: Old London Hunter Green 800mm 3 Door Floor Standing Angled Vanity Unit With 3 Tap Holes Marble Basin



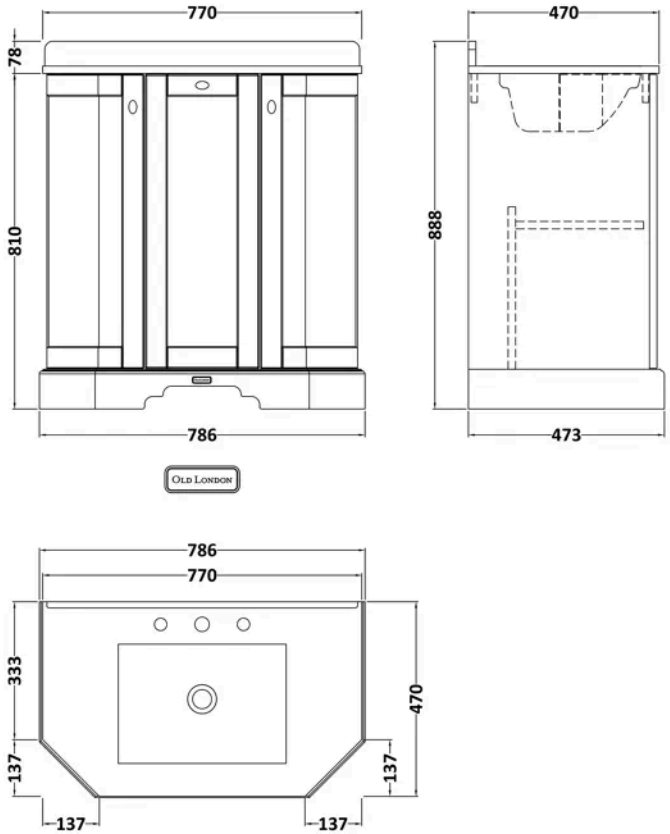

Product Dimensions

Product	888 x 786 x 470mm (H x W x D)
Packaged	850 x 805 x 510mm (H x W x D)
Nett Weight	50 kg
Packaged Weight	50.5 kg

Product Details

Country of Origin	Republic of Ireland
Product Material	Mdf Vinyl Smooth Matt
Colour/Finish	Hunter Green
Mount Type	Floor
Style	Traditional
Handle Type	Knob
Construction Method	Cam & Wood Dowel
Construction Type	Rigid
Fascia Finish	Mdf Vinyl Smooth Matt
Fsc Certified	Yes
Handles Included	Yes
Inner Bowl Height	160 mm
Material Thickness	18 mm
No. Doors	3
No. Of Tapholes	3
No. Shelves	1
Number Of Bowls	1
Number Of Shelves	1
Overflow Cover Included	No
Overflow Included	No
Tap Included	No
Waste Included	No
Waste Shroud	No

© ROXOR Group

Sales Code: LOM268 **Barcode:** 5056211871620 **Brand:** Old London **Description:** Old London 3 Tap Hole 750mm Grey Angled Single Bowl Marble Top Basin



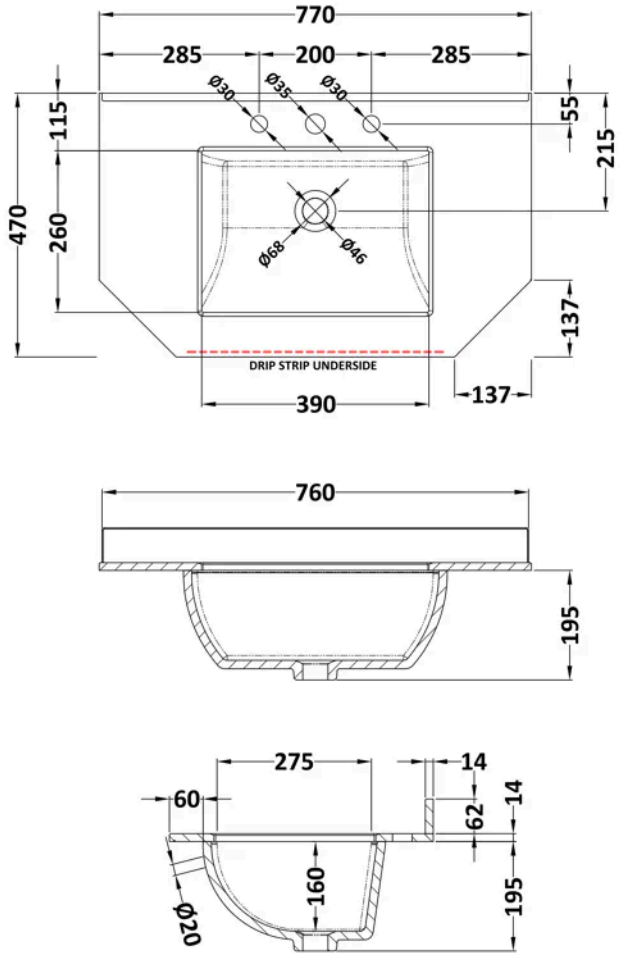

Product Dimensions

Product	268 x 770 x 470mm (H x W x D)
Packaged	250 x 860 x 580mm (H x W x D)
Nett Weight	18 kg
Packaged Weight	18.5 kg

Packaging Details

Box Qty	1

Product Details

Country of Origin	China
Product Material	Vitreous China
Colour/Finish	Grey

© ROXOR Group

Sales Code: LON804 **Barcode:** 5056462622750 **Brand:** Old London **Description:** Old London 750mm Hunter Green 3 Door Floor Standing Vanity Unit



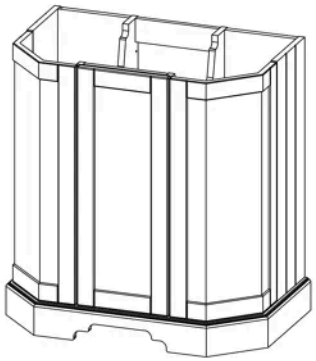

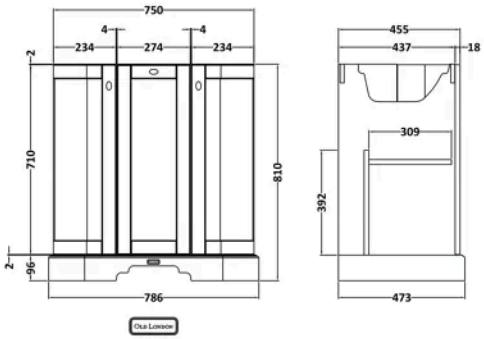

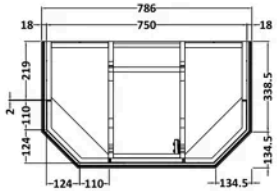

Product Dimensions

Product	810 x 786 x 471mm (H x W x D)
Packaged	851 x 854 x 511mm (H x W x D)
Nett Weight	32.5 kg
Packaged Weight	33 kg

Packaging Details

Box Qty	1

Product Details

Country of Origin	Republic of Ireland
Product Material	Mdf Vinyl Smooth Matt
Colour/Finish	Hunter Green
Mount Type	Floor
Style	Traditional
Handle Type	Knob
Construction Method	Cam & Wood Dowel
Construction Type	Rigid
Fascia Finish	Mdf Vinyl Smooth Matt
Handles Included	Yes
Material Thickness	18 mm
No. Doors	3
No. Shelves	1
Number Of Shelves	1
Waste Shroud	No

© ROXOR Group