Sales Code: LOF491

Barcode: 5056817714024

Brand: Old London

Description: Old London Timeless Sand 800mm 2 Door Floor Standing Vanity Unit With 3 Tap Holes Fireclay Basin



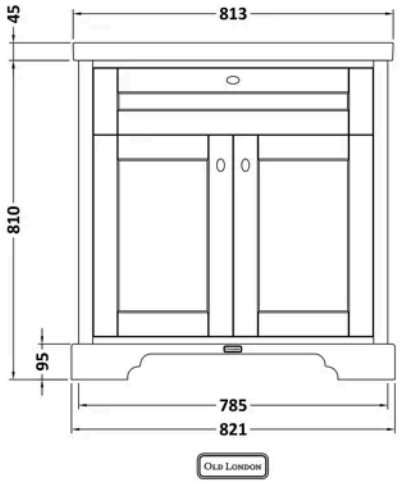

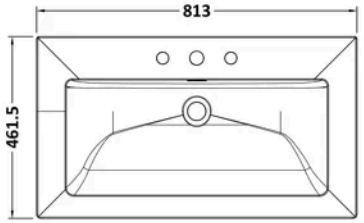

Product Dimensions

Product	855 x 813 x 462mm (H x W x D)
Packaged	840 x 850 x 511mm (H x W x D)
Nett Weight	56.5 kg
Packaged Weight	57 kg

Product Details

Country of Origin	Republic of Ireland
Product Material	Fireclay,Mdf Vinyl Textured Woodgrain
Colour/Finish	Timeless Sand
Mount Type	Floor
Style	Traditional
Handle Type	Knob
Construction Method	Cam & Wood Dowel
Construction Type	Rigid
Fascia Finish	Mdf Vinyl Textured Woodgrain
Fsc Certified	Yes
Handles Included	Yes
Material Thickness	18 mm
No. Doors	2
No. Of Tapholes	3
No. Shelves	1
Number Of Bowls	1
Number Of Shelves	1
Overflow Cover Included	No
Overflow Included	No
Tap Included	No
Waste Included	No
Waste Shroud	No

© ROXOR Group

Sales Code: CBM635 **Barcode:** 5056678485279 **Brand:** nuie **Description:** 3 Tap Hole 800mm Contemporary Fireclay Basin



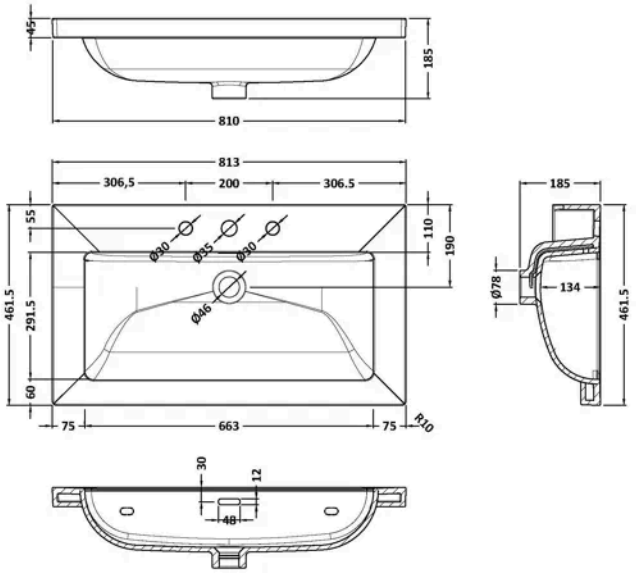

Product Dimensions

Product	45 x 810 x 460mm (H x W x D)
Packaged	490 x 850 x 220mm (H x W x D)
Nett Weight	21.5 kg
Packaged Weight	21.5 kg

Packaging Details

Box Qty	1
Label Size (mm)	100 x 50
Label Colour	White
Label Qty	2.0000

Product Details

Country of Origin	United Arab Emirates
Product Material	Fireclay
Colour/Finish	White
Style	Contemporary
Fixings Included	No
Bottle Trap Included	No
Ce Certified	Yes
Inner Bowl Depth	295 mm
Inner Bowl Height	134 mm
Inner Bowl Width	680 mm
No. Of Tapholes	3
Number Of Bowls	1
Overflow Cover Included	No
Overflow Included	Yes
Tap Included	No
Waste Included	No

© ROXOR Group

Sales Code: LON405 **Barcode:** 5056211818045 **Brand:** Old London **Description:** Old London 800mm Timeless Sand 2 Door Floor Standing Vanity Unit



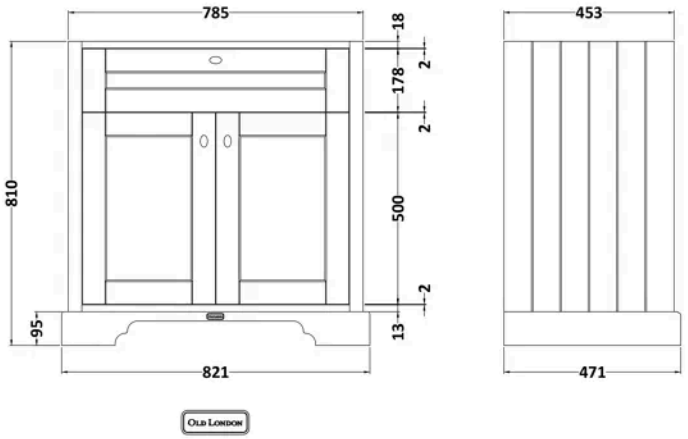

Product Dimensions

Product	810 x 821 x 473mm (H x W x D)
Packaged	851 x 854 x 511mm (H x W x D)
Nett Weight	35.5 kg
Packaged Weight	36 kg

Packaging Details

Box Qty	1

Product Details

Country of Origin	Republic of Ireland
Product Material	Mdf Vinyl Textured Woodgrain
Colour/Finish	Timeless Sand
Mount Type	Floor
Style	Traditional
Handle Type	Knob
Construction Method	Cam & Wood Dowel
Construction Type	Rigid
Fascia Finish	Mdf Vinyl Textured Woodgrain
Handles Included	Yes
Material Thickness	18 mm
No. Doors	2
No. Shelves	1
Number Of Shelves	1
Waste Shroud	No

© ROXOR Group