Sales Code: LOF459

Barcode: 5056462603049

Brand: Old London

Description: Old London Timeless Sand 1200mm 4 Door Floor Standing Angled Vanity Unit With 3 Tap Holes Black Marble Basin



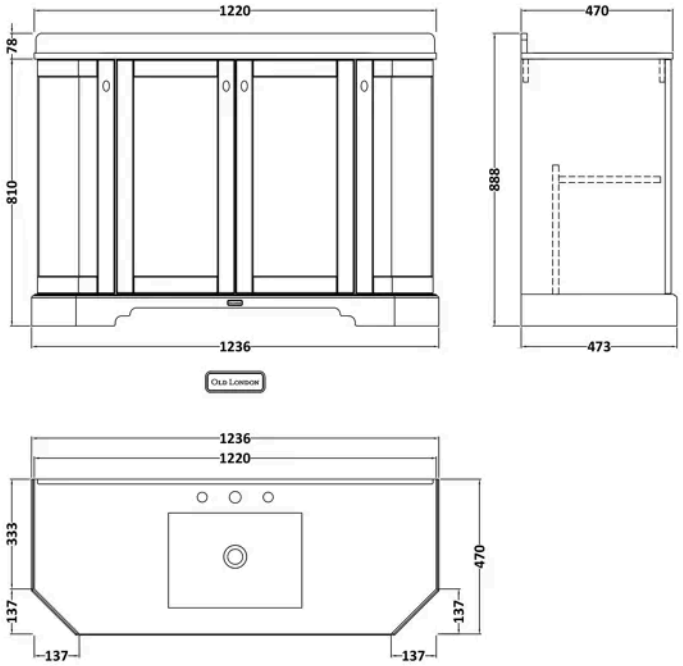

Product Dimensions

Product	888 x 1236 x 470mm (H x W x D)
Packaged	550 x 550 x 550mm (H x W x D)
Nett Weight	80.5 kg
Packaged Weight	81 kg

Product Details

Country of Origin	Republic of Ireland
Product Material	Mdf Vinyl Textured Woodgrain
Colour/Finish	Timeless Sand
Mount Type	Floor
Style	Traditional
Handle Type	Knob
Construction Method	Cam & Wood Dowel
Construction Type	Rigid
Fascia Finish	Mdf Vinyl Textured Woodgrain
Fsc Certified	Yes
Handles Included	Yes
Inner Bowl Height	160 mm
Material Thickness	18 mm
No. Doors	4
No. Of Tapholes	3
No. Shelves	1
Number Of Bowls	1
Number Of Shelves	1
Overflow Cover Included	No
Overflow Included	No
Tap Included	No
Waste Included	No
Waste Shroud	No

© ROXOR Group

Sales Code: LOM278 **Barcode:** 5056211871521 **Brand:** Old London **Description:** Old London 3 Tap Hole 1200mm Black Angled Single Bowl Marble Top Basin



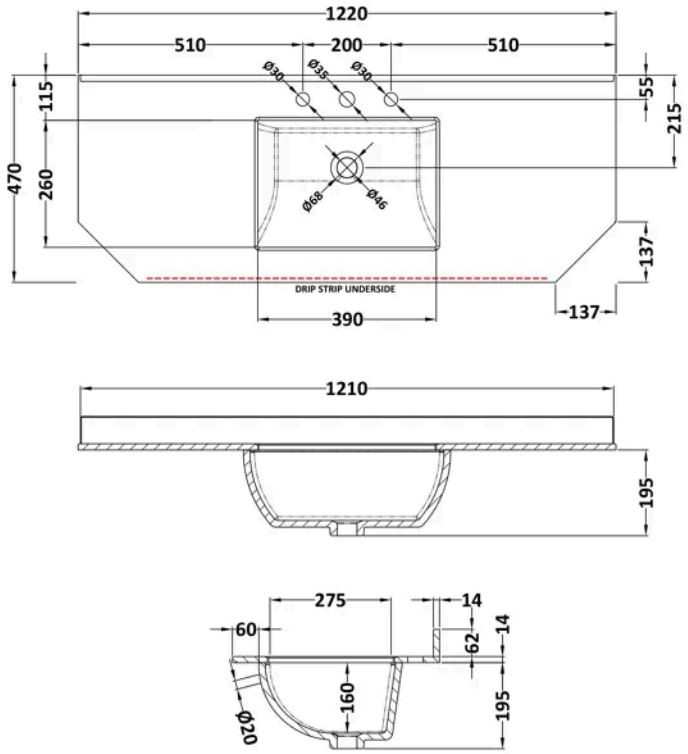

Product Dimensions

Product	268 x 1220 x 470mm (H x W x D)
Packaged	250 x 1300 x 580mm (H x W x D)
Nett Weight	27.5 kg
Packaged Weight	28 kg

Packaging Details

Box Qty	1

Product Details

Country of Origin	China
Product Material	Vitreous China
Colour/Finish	Black

© ROXOR Group

Sales Code: LON408 **Barcode:** 5056211871743 **Brand:** Old London **Description:** Old London 1200mm Timeless Sand 4 Door Floor Standing Vanity Unit Standing Angled



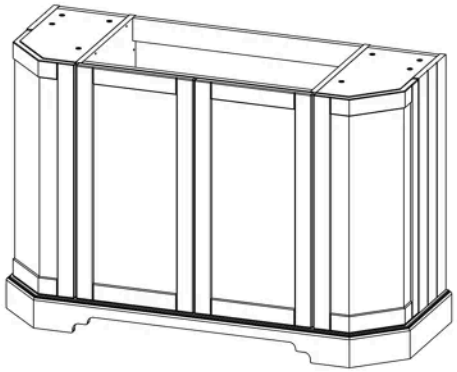

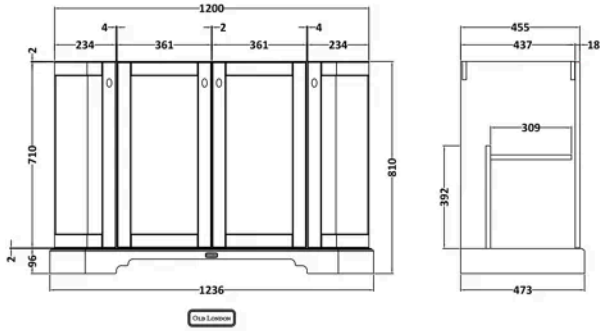

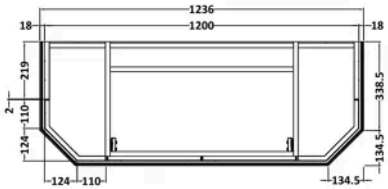

Product Dimensions

Product	810 x 1236 x 471mm (H x W x D)
Packaged	850 x 1255 x 510mm (H x W x D)
Nett Weight	53.5 kg
Packaged Weight	54 kg

Packaging Details

Box Qty	1

Product Details

Country of Origin	Republic of Ireland
Product Material	Mdf Vinyl Textured Woodgrain
Colour/Finish	Timeless Sand
Mount Type	Floor
Style	Traditional
Handle Type	Knob
Construction Method	Cam & Wood Dowel
Construction Type	Rigid
Fascia Finish	Mdf Vinyl Textured Woodgrain
Handles Included	Yes
Material Thickness	18 mm
No. Doors	4
No. Shelves	1
Number Of Shelves	1
Waste Shroud	No

© ROXOR Group