Sales Code: LOF448

Barcode: 5056817714048

Brand: Old London

Description: Old London Timeless Sand 1000mm 2 Door Floor Standing Vanity Unit With Fireclay Basin



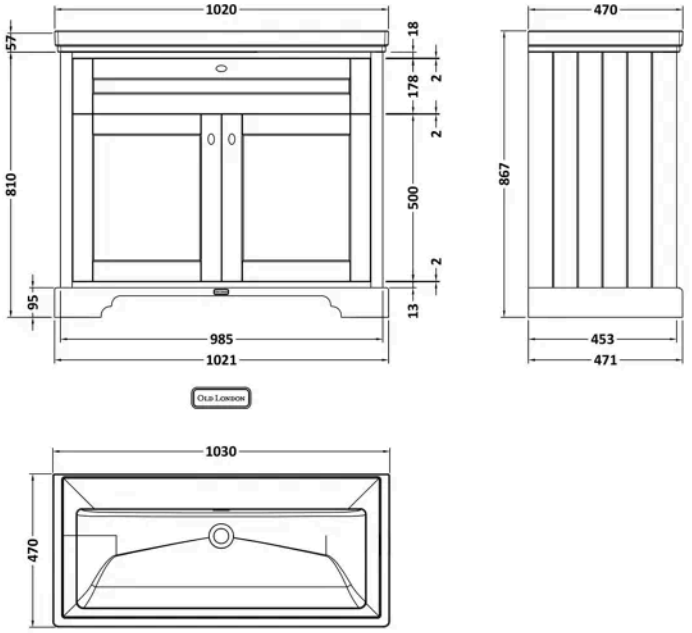

Product Dimensions

Product	867 x 1020 x 470mm (H x W x D)
Packaged	840 x 1050 x 511mm (H x W x D)
Nett Weight	68 kg
Packaged Weight	68.5 kg

Product Details

Country of Origin	Republic of Ireland
Product Material	Fireclay,Mdf Vinyl Textured Woodgrain
Colour/Finish	Timeless Sand
Mount Type	Floor
Style	Traditional
Handle Type	Knob
Construction Method	Cam & Wood Dowel
Construction Type	Rigid
Fascia Finish	Mdf Vinyl Textured Woodgrain
Fsc Certified	Yes
Handles Included	Yes
Inner Bowl Height	134 mm
Material Thickness	18 mm
No. Doors	2
No. Of Tapholes	No Tapholes
No. Shelves	1
Number Of Bowls	1
Number Of Shelves	1
Overflow Cover Included	No
Overflow Included	No
Tap Included	No
Waste Included	No
Waste Shroud	No

© ROXOR Group

Sales Code: CBM517 **Barcode:** 5056678492277 **Brand:** nuie **Description:** 0 Tap Hole 1000mm Traditional Fireclay Basin



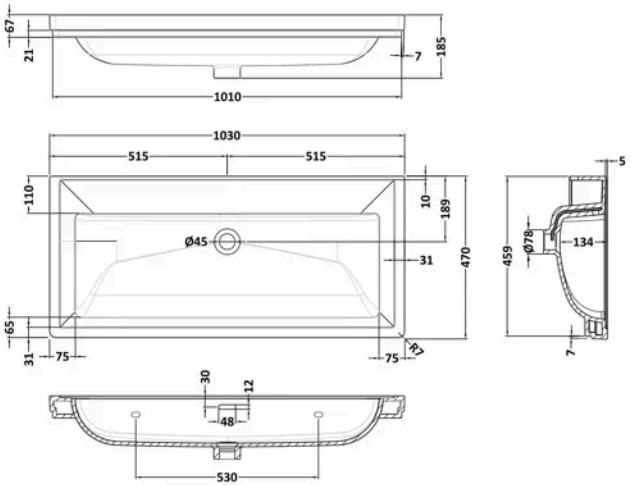

Product Dimensions

Product	185 x 1030 x 470mm (H x W x D)
Packaged	490 x 1050 x 220mm (H x W x D)
Nett Weight	26 kg
Packaged Weight	27 kg

Packaging Details

Box Qty	1

Product Details

Country of Origin	United Arab Emirates
Colour/Finish	White
Style	Contemporary
Bottle Trap Included	No
Ce Certified	Yes
No. Of Tapholes	No Tapholes
Number Of Bowls	1
Overflow Cover Included	Yes
Overflow Included	Yes

© ROXOR Group

Sales Code: LON407 **Barcode:** 5056211844600 **Brand:** Old London **Description:** Old London 1000mm Timeless Sand 2 Door Floor Standing Vanity Unit



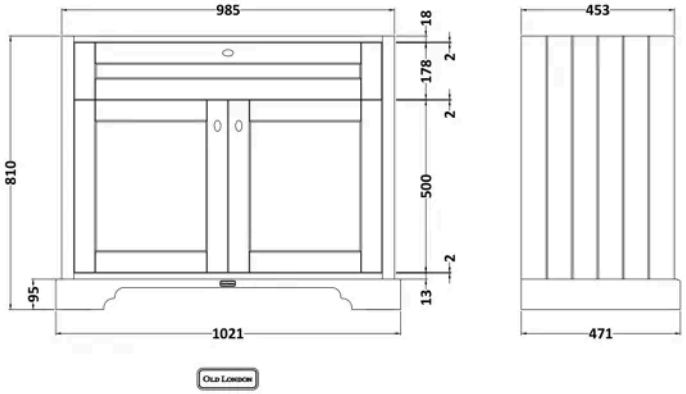

Product Dimensions

Product	810 x 1021 x 473mm (H x W x D)
Packaged	850 x 1055 x 510mm (H x W x D)
Nett Weight	42.5 kg
Packaged Weight	43.5 kg

Packaging Details

Box Qty	1

Product Details

Country of Origin	Republic of Ireland
Product Material	Mdf Vinyl Textured Woodgrain
Colour/Finish	Timeless Sand
Mount Type	Floor
Style	Traditional
Handle Type	Knob
Construction Method	Cam & Wood Dowel
Construction Type	Rigid
Fascia Finish	Mdf Vinyl Textured Woodgrain
Handles Included	Yes
Material Thickness	18 mm
No. Doors	2
No. Shelves	1
Number Of Shelves	1
Waste Shroud	No

© ROXOR Group