**Sales Code:** LOF421

**Barcode:** 5056211819486

**Brand:** Old London

**Description:** Old London 600mm Timeless Sand 2 Door Floor Standing Cabinet With 1 Tap Hole Marble Basin



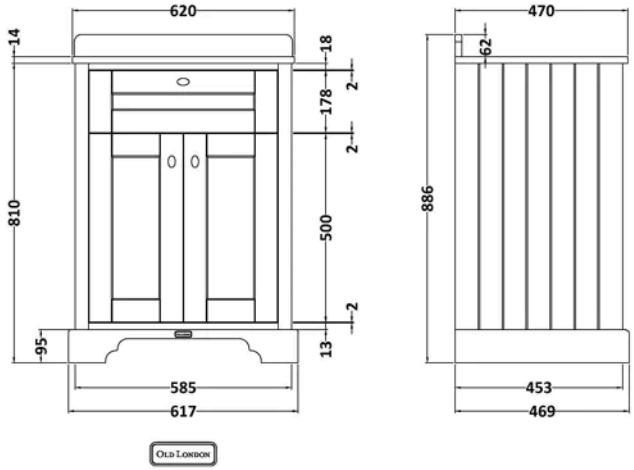


## Product Dimensions

| | |
|---|---|
| Product | 886 x 620 x 470mm (H x W x D) |
| Packaged | 845 x 660 x 505mm (H x W x D) |
| Nett Weight | 42.5 kg |
| Packaged Weight | 43 kg |

## Product Details

| | |
|---|---|
| Country of Origin | Republic of Ireland |
| Product Material | Mdf Vinyl Textured Woodgrain |
| Colour/Finish | Timeless Sand |
| Mount Type | Floor |
| Style | Traditional |
| Handle Type | Knob |
| Construction Method | Cam & Wood Dowel |
| Construction Type | Rigid |
| Fascia Finish | Mdf Vinyl Textured Woodgrain |
| Fsc Certified | Yes |
| Handles Included | Yes |
| Inner Bowl Height | 160 mm |
| Material Thickness | 18 mm |
| No. Doors | 2 |
| No. Of Tapholes | 1 |
| No. Shelves | 1 |
| Number Of Bowls | 1 |
| Number Of Shelves | 1 |
| Overflow Cover Included | No |
| Overflow Included | No |
| Tap Included | No |
| Waste Included | No |
| Waste Shroud | No |

© ROXOR Group

**Sales Code:** LOM221 **Barcode:** 5056211818960 **Brand:** Old London **Description:** Old London 1 Tap Hole 600mm Black Single Bowl Marble Top Basin



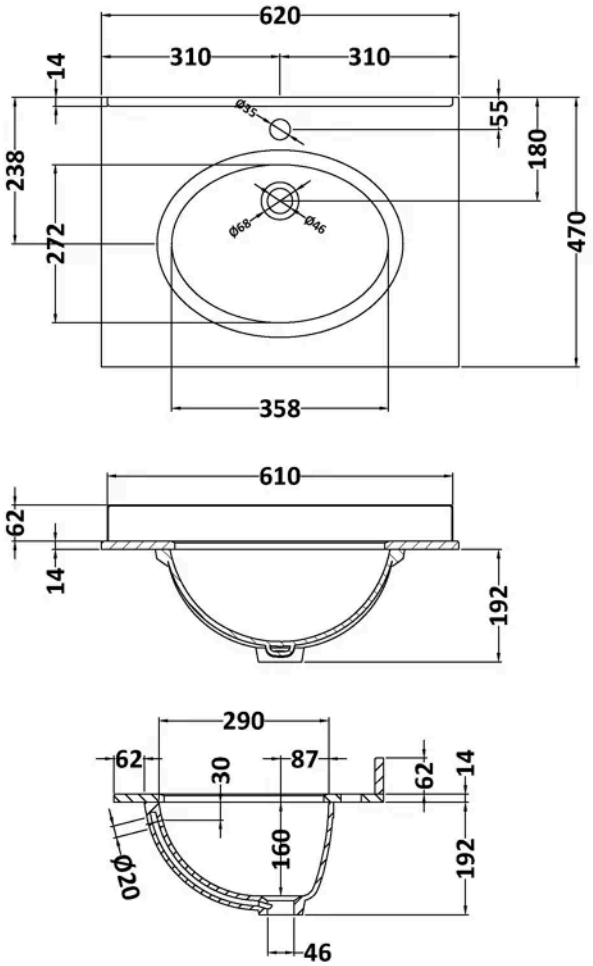


## Product Dimensions

| | |
|---|---|
| Product | 268 x 620 x 463mm (H x W x D) |
| Packaged | 310 x 700 x 550mm (H x W x D) |
| Nett Weight | 13.5 kg |
| Packaged Weight | 14 kg |

## Product Details

| | |
|---|---|
| Country of Origin | China |
| Product Material | Vitreous China |
| Colour/Finish | Black |
| Inner Bowl Height | 160 mm |
| No. Of Tapholes | 1 |
| Number Of Bowls | 1 |

© ROXOR Group

**Sales Code:** LON403 **Barcode:** 5056211818014 **Brand:** Old London **Description:** Old London 600mm Timeless Sand 2 Door Floor Standing Vanity Unit



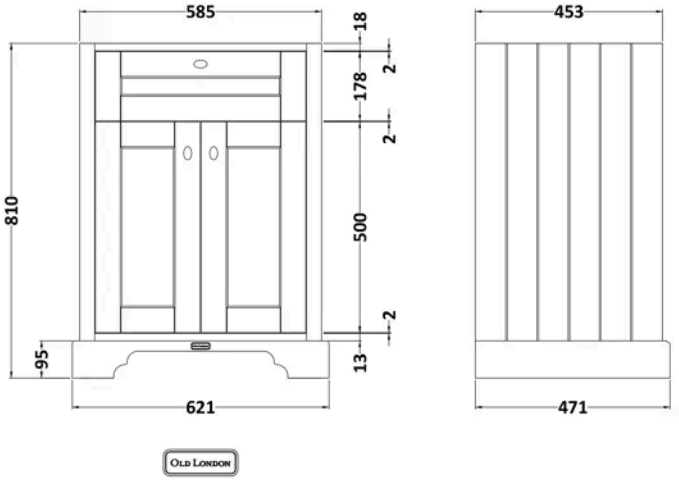


## Product Dimensions

| | |
|---|---|
| Product | 810 x 621 x 471mm (H x W x D) |
| Packaged | 840 x 651 x 511mm (H x W x D) |
| Nett Weight | 29.5 kg |
| Packaged Weight | 30 kg |

## Product Details

| | |
|---|---|
| Country of Origin | Republic of Ireland |
| Product Material | Mdf Vinyl Textured Woodgrain |
| Colour/Finish | Timeless Sand |
| Mount Type | Floor |
| Style | Traditional |
| Handle Type | Knob |
| Construction Method | Cam & Wood Dowel |
| Construction Type | Rigid |
| Fascia Finish | Mdf Vinyl Textured Woodgrain |
| Handles Included | Yes |
| Material Thickness | 18 mm |
| No. Doors | 2 |
| No. Shelves | 1 |
| Number Of Shelves | 1 |
| Waste Shroud | No |

© ROXOR Group