Sales Code: LOF407

Barcode: 5056211847571

Brand: Old London

Description: Old London 1000mm Timeless Sand 2 Door Floor Standing Cabinet With 1 Tap Hole Basin



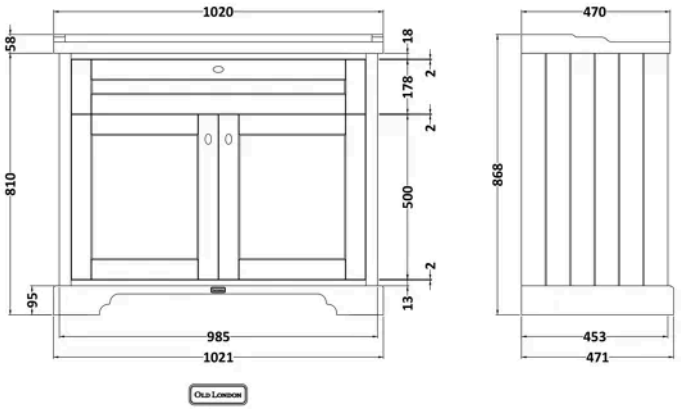

Product Dimensions

Product	868 x 1020 x 470mm (H x W x D)
Packaged	868 x 1021 x 471mm (H x W x D)
Nett Weight	68 kg
Packaged Weight	68.5 kg

Product Details

Country of Origin	Republic of Ireland
Product Material	Mdf Vinyl Textured Woodgrain
Colour/Finish	Timeless Sand
Mount Type	Floor
Style	Traditional
Handle Type	Knob
Construction Method	Cam & Wood Dowel
Construction Type	Rigid
Fascia Finish	Mdf Vinyl Textured Woodgrain
Fsc Certified	Yes
Handles Included	Yes
Inner Bowl Height	160 mm
Material Thickness	18 mm
No. Doors	2
No. Of Tapholes	1
No. Shelves	1
Number Of Bowls	1
Number Of Shelves	1
Overflow Cover Included	No
Overflow Included	No
Tap Included	No
Waste Included	No
Waste Shroud	No

© ROXOR Group

Sales Code: LON407 **Barcode:** 5056211844600 **Brand:** Old London **Description:** Old London 1000mm Timeless Sand 2 Door Floor Standing Vanity Unit



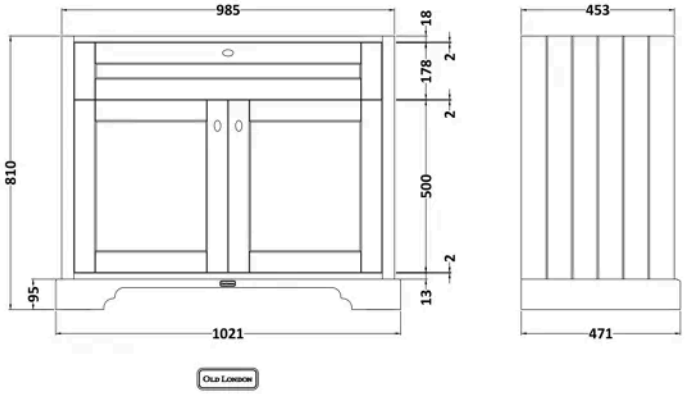

Product Dimensions

Product	810 x 1021 x 473mm (H x W x D)
Packaged	850 x 1055 x 510mm (H x W x D)
Nett Weight	42.5 kg
Packaged Weight	43.5 kg

Packaging Details

Box Qty	1

Product Details

Country of Origin	Republic of Ireland
Product Material	Mdf Vinyl Textured Woodgrain
Colour/Finish	Timeless Sand
Mount Type	Floor
Style	Traditional
Handle Type	Knob
Construction Method	Cam & Wood Dowel
Construction Type	Rigid
Fascia Finish	Mdf Vinyl Textured Woodgrain
Handles Included	Yes
Material Thickness	18 mm
No. Doors	2
No. Shelves	1
Number Of Shelves	1
Waste Shroud	No

© ROXOR Group

Sales Code: NLV007 **Barcode:** 5056211825715 **Brand:** nuie **Description:** 1 Tap Hole 1000mm Traditional Ceramic Basin



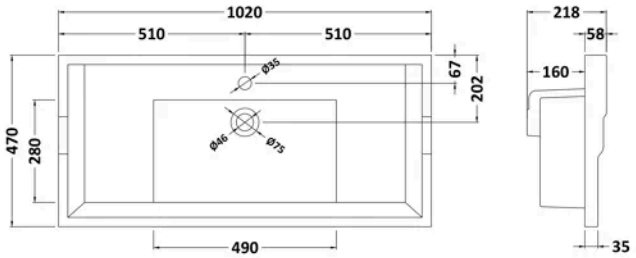

Product Dimensions

Product	218 x 1020 x 145mm (H x W x D)
Packaged	260 x 1020 x 480mm (H x W x D)
Nett Weight	26 kg
Packaged Weight	27 kg

Packaging Details

Box Qty	1

Product Details

Country of Origin	China
Product Material	Vitreous China
Colour/Finish	White
Ce Certified	Yes
Inner Bowl Height	160 mm
No. Of Tapholes	1
Number Of Bowls	1

© ROXOR Group