Sales Code: LOF383

Barcode: 5056462602752

Brand: Old London

Description: Old London Twilight Blue 1000mm 4 Door Floor Standing Angled Vanity Unit With 1 Tap Hole Marble Basin



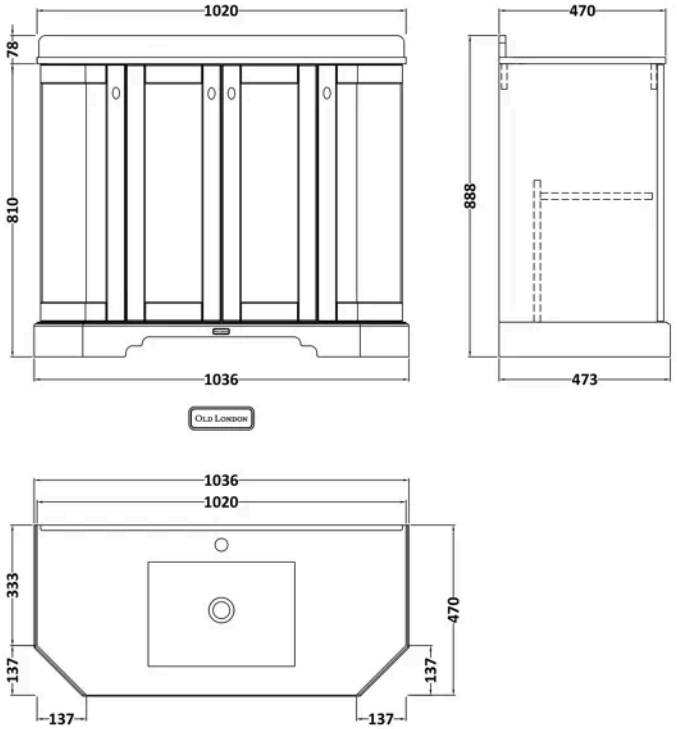

Product Dimensions

Product	888 x 1036 x 470mm (H x W x D)
Packaged	550 x 550 x 550mm (H x W x D)
Nett Weight	61.5 kg
Packaged Weight	62 kg

Product Details

Country of Origin	Republic of Ireland
Product Material	Mdf Vinyl Textured Woodgrain
Colour/Finish	Twilight Blue
Mount Type	Floor
Style	Traditional
Handle Type	Knob
Construction Method	Cam & Wood Dowel
Construction Type	Rigid
Fascia Finish	Mdf Vinyl Textured Woodgrain
Fsc Certified	Yes
Handles Included	Yes
Inner Bowl Height	160 mm
Material Thickness	18 mm
No. Doors	4
No. Of Tapholes	1
No. Shelves	1
Number Of Bowls	1
Number Of Shelves	1
Overflow Cover Included	No
Overflow Included	No
Tap Included	No
Waste Included	No
Waste Shroud	No

© ROXOR Group

Sales Code: LOM270 **Barcode:** 5056211871606 **Brand:** Old London **Description:** Old London 1 Tap Hole 1000mm White Angled Single Bowl Marble Top Basin



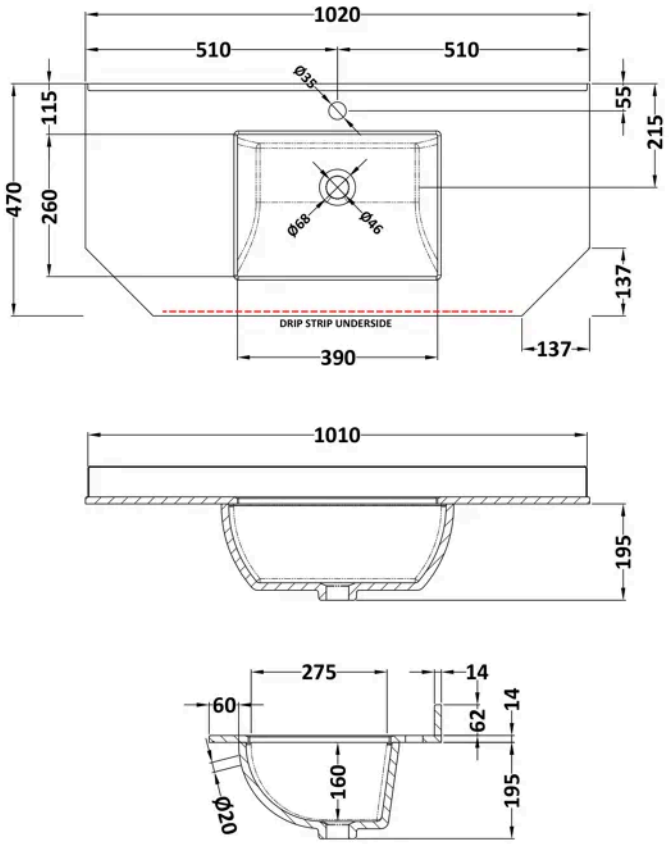

Product Dimensions

Product	268 x 1020 x 470mm (H x W x D)
Packaged	250 x 1100 x 580mm (H x W x D)
Nett Weight	19.5 kg
Packaged Weight	20 kg

Packaging Details

Box Qty	1

Product Details

Country of Origin	China
Product Material	Vitreous China
Colour/Finish	White

© ROXOR Group

Sales Code: LON306 **Barcode:** 5056211871781 **Brand:** Old London **Description:** Old London 1000mm Twilight Blue 4 Door Floor Standing Vanity Unit



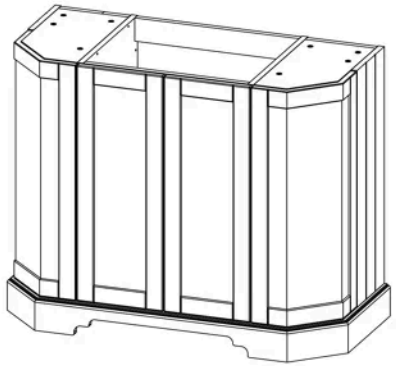

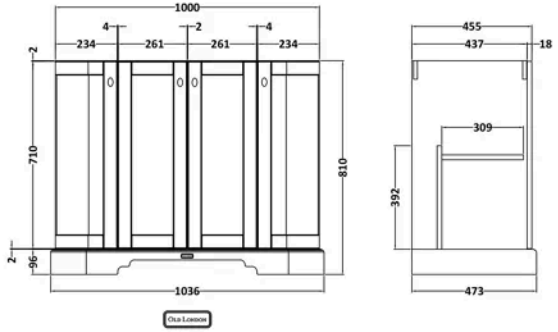

Product Dimensions

Product	810 x 1036 x 471mm (H x W x D)
Packaged	850 x 1055 x 510mm (H x W x D)
Nett Weight	42.5 kg
Packaged Weight	43.5 kg

Packaging Details

Box Qty	1

Product Details

Country of Origin	Republic of Ireland
Product Material	Mdf Vinyl Textured Woodgrain
Colour/Finish	Twilight Blue
Mount Type	Floor
Style	Traditional
Handle Type	Knob
Construction Method	Cam & Wood Dowel
Construction Type	Rigid
Fascia Finish	Mdf Vinyl Textured Woodgrain
Handles Included	Yes
Material Thickness	18 mm
No. Doors	4
No. Shelves	1
Number Of Shelves	1
Waste Shroud	No

© ROXOR Group