**Sales Code:** LOF292 **Barcode:** 5056817714161 **Brand:** Old London **Description:** Old London Storm Grey 1000mm 2 Door Floor Standing Vanity Unit With Fireclay Basin



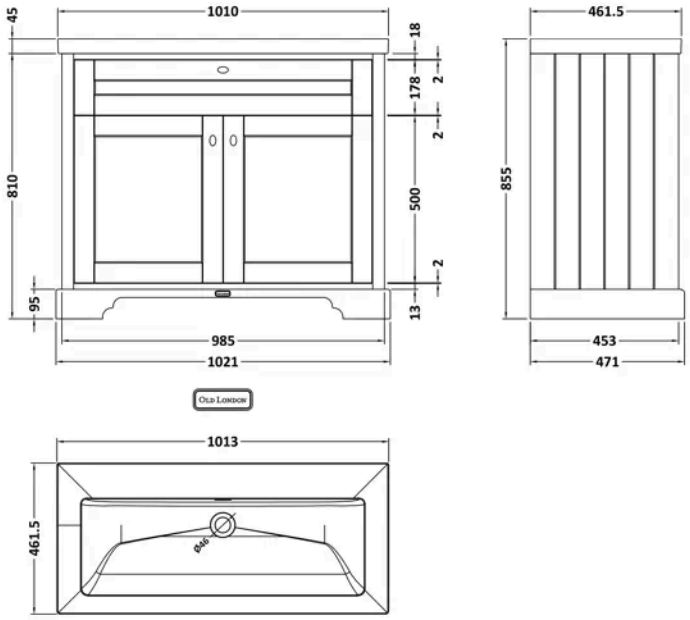


## Product Dimensions

| | |
|---|---|
| Product | 855 x 1010 x 462mm (H x W x D) |
| Packaged | 840 x 1050 x 511mm (H x W x D) |
| Nett Weight | 68 kg |
| Packaged Weight | 68.5 kg |

## Product Details

| | |
|---|---|
| Country of Origin | Republic of Ireland |
| Product Material | Fireclay,Mdf Vinyl Textured Woodgrain |
| Colour/Finish | Storm Grey |
| Mount Type | Floor |
| Style | Traditional |
| Handle Type | Knob |
| Construction Method | Cam & Wood Dowel |
| Construction Type | Rigid |
| Fascia Finish | Mdf Vinyl Textured Woodgrain |
| Fsc Certified | Yes |
| Handles Included | Yes |
| Inner Bowl Height | 134 mm |
| Material Thickness | 18 mm |
| No. Doors | 2 |
| No. Of Tapholes | No Tapholes |
| No. Shelves | 1 |
| Number Of Bowls | 1 |
| Number Of Shelves | 1 |
| Overflow Cover Included | No |
| Overflow Included | No |
| Tap Included | No |
| Waste Included | No |
| Waste Shroud | No |

© ROXOR Group

**Sales Code:** CBM617 **Barcode:** 5056678485316 **Brand:** nuie **Description:** 0 Tap Hole 1000mm Contemporary Fireclay Basin

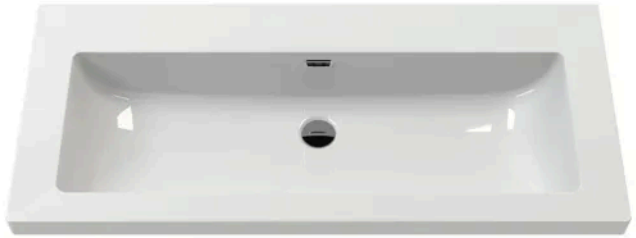

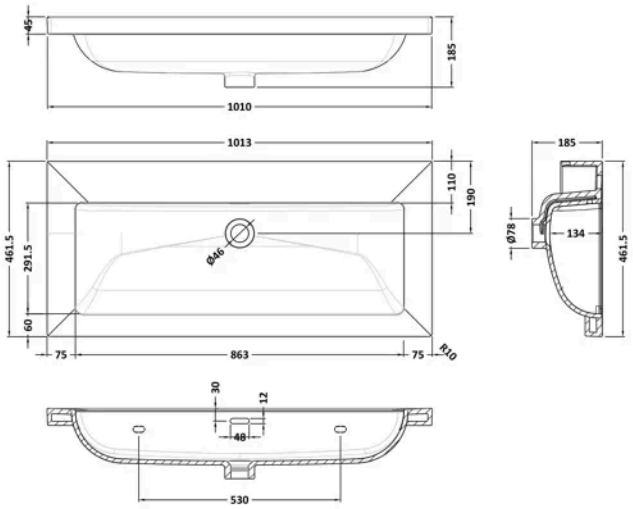


## Product Dimensions

| | |
|---|---|
| Product | 45 x 1010 x 460mm (H x W x D) |
| Packaged | 490 x 1050 x 220mm (H x W x D) |
| Nett Weight | 26 kg |
| Packaged Weight | 27 kg |

## Packaging Details

| | |
|---|---|
| Box Qty | 1 |
| Label Size (mm) | 100 x 50 |
| Label Colour | White |
| Label Qty | 2.0000 |

## Product Details

| | |
|---|---|
| Country of Origin | United Arab Emirates |
| Product Material | Fireclay |
| Colour/Finish | White |
| Style | Contemporary |
| Fixings Included | No |
| Bottle Trap Included | No |
| Ce Certified | Yes |
| Inner Bowl Depth | 290 mm |
| Inner Bowl Height | 134 mm |
| Inner Bowl Width | 860 mm |
| No. Of Tapholes | No Tapholes |
| Number Of Bowls | 1 |
| Overflow Cover Included | No |
| Overflow Included | Yes |
| Tap Included | No |
| Waste Included | No |

© ROXOR Group

**Sales Code:** LON207 **Barcode:** 5056211844587 **Brand:** Old London **Description:** Old London 1000mm Storm Grey 2 Door Floor Standing Vanity Unit



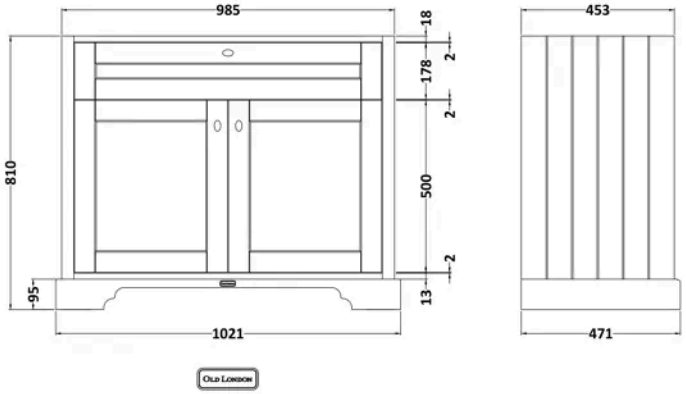


## Product Dimensions

| | |
|---|---|
| Product | 810 x 1021 x 473mm (H x W x D) |
| Packaged | 850 x 1055 x 510mm (H x W x D) |
| Nett Weight | 42.5 kg |
| Packaged Weight | 43.5 kg |

## Packaging Details

| | |
|---|---|
| Box Qty | 1 |

## Product Details

| | |
|---|---|
| Country of Origin | Republic of Ireland |
| Product Material | Mdf Vinyl Textured Woodgrain |
| Colour/Finish | Storm Grey |
| Mount Type | Floor |
| Style | Traditional |
| Handle Type | Knob |
| Construction Method | Cam & Wood Dowel |
| Construction Type | Rigid |
| Fascia Finish | Mdf Vinyl Textured Woodgrain |
| Handles Included | Yes |
| Material Thickness | 18 mm |
| No. Doors | 2 |
| No. Shelves | 1 |
| Number Of Shelves | 1 |
| Waste Shroud | No |

© ROXOR Group