**Sales Code:** LOF282

**Barcode:** 5056462602714

**Brand:** Old London

**Description:** Old London Storm Grey 1000mm 4 Door Floor Standing Angled Vanity Unit With 1 Tap Hole Marble Basin



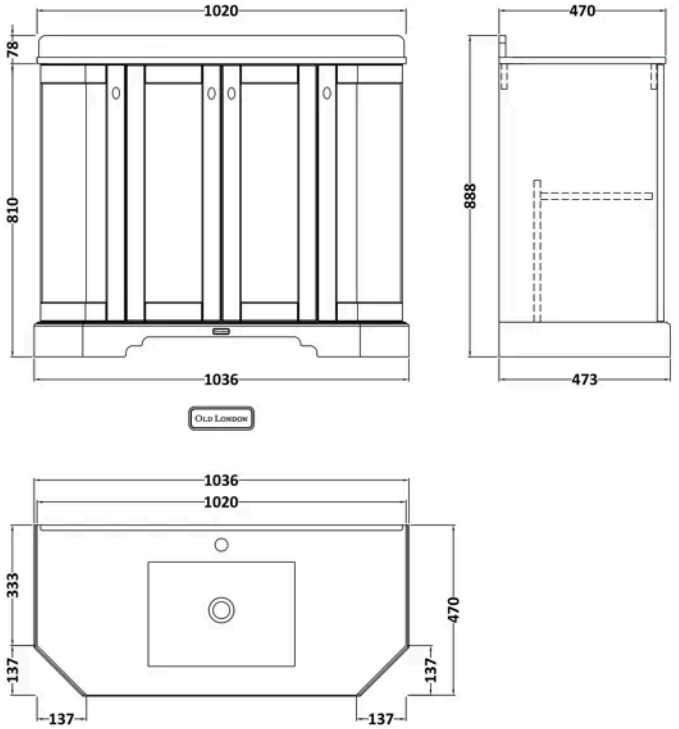


## Product Dimensions

| | |
|---|---|
| Product | 888 x 1036 x 470mm (H x W x D) |
| Packaged | 550 x 550 x 550mm (H x W x D) |
| Nett Weight | 61.5 kg |
| Packaged Weight | 62 kg |

## Product Details

| | |
|---|---|
| Country of Origin | Republic of Ireland |
| Product Material | Mdf Vinyl Textured Woodgrain |
| Colour/Finish | Storm Grey |
| Mount Type | Floor |
| Style | Traditional |
| Handle Type | Knob |
| Construction Method | Cam & Wood Dowel |
| Construction Type | Rigid |
| Fascia Finish | Mdf Vinyl Textured Woodgrain |
| Fsc Certified | Yes |
| Handles Included | Yes |
| Inner Bowl Height | 160 mm |
| Material Thickness | 18 mm |
| No. Doors | 4 |
| No. Of Tapholes | 1 |
| No. Shelves | 1 |
| Number Of Bowls | 1 |
| Number Of Shelves | 1 |
| Overflow Cover Included | No |
| Overflow Included | No |
| Tap Included | No |
| Waste Included | No |
| Waste Shroud | No |

© ROXOR Group

**Sales Code:** LOM269 **Barcode:** 5056211871613 **Brand:** Old London **Description:** Old London 1 Tap Hole 1000mm Black Angled Single Bowl Marble Top Basin



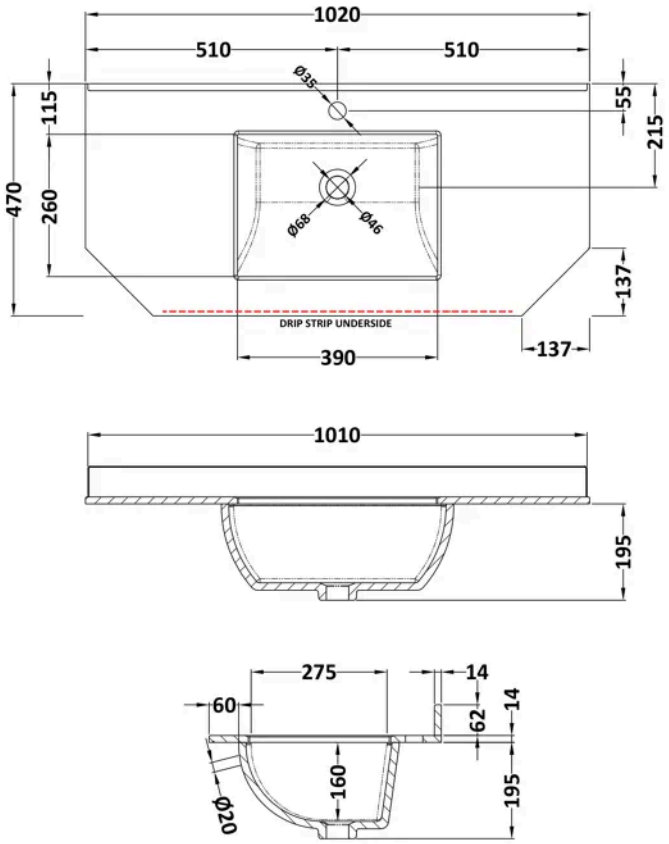


## Product Dimensions

| | |
|---|---|
| Product | 268 x 1020 x 470mm (H x W x D) |
| Packaged | 250 x 1100 x 580mm (H x W x D) |
| Nett Weight | 19.5 kg |
| Packaged Weight | 20 kg |

## Packaging Details

| | |
|---|---|
| Box Qty | 1 |

## Product Details

| | |
|---|---|
| Country of Origin | China |
| Product Material | Vitreous China |
| Colour/Finish | Black |

© ROXOR Group

**Sales Code:** LON206 **Barcode:** 5056211871798 **Brand:** Old London **Description:** Old London 1000mm Storm Grey 4 Door Floor Standing Vanity Unit



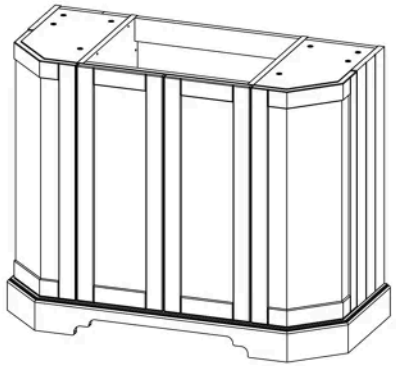

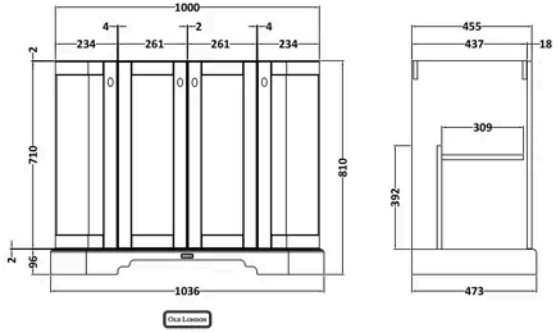


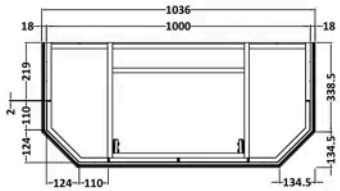


## Product Dimensions

| | |
|---|---|
| Product | 810 x 1036 x 471mm (H x W x D) |
| Packaged | 850 x 1055 x 510mm (H x W x D) |
| Nett Weight | 42.5 kg |
| Packaged Weight | 43.5 kg |

## Packaging Details

| | |
|---|---|
| Box Qty | 1 |

## Product Details

| | |
|---|---|
| Country of Origin | Republic of Ireland |
| Product Material | Mdf Vinyl Textured Woodgrain |
| Colour/Finish | Storm Grey |
| Mount Type | Floor |
| Style | Traditional |
| Handle Type | Knob |
| Construction Method | Cam & Wood Dowel |
| Construction Type | Rigid |
| Fascia Finish | Mdf Vinyl Textured Woodgrain |
| Handles Included | Yes |
| Material Thickness | 18 mm |
| No. Doors | 4 |
| No. Shelves | 1 |
| Number Of Shelves | 1 |
| Waste Shroud | No |

© ROXOR Group