Sales Code: LOF263 **Barcode:** 5056211819820 **Brand:** Old London **Description:** Old London 1200mm Storm Grey 4 Door Floor Standing Cabinet With Black Marble Basin



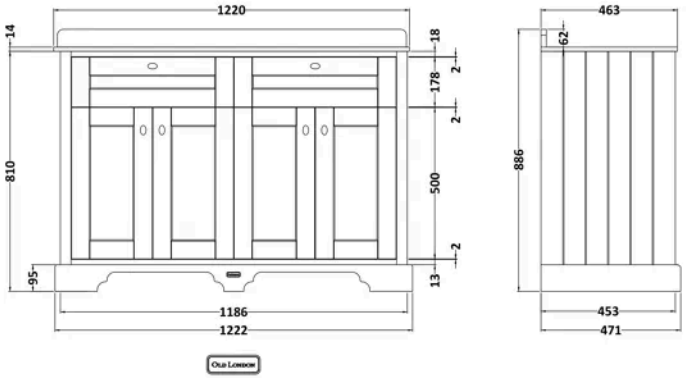

Product Dimensions

Product	886 x 1220 x 470mm (H x W x D)
Packaged	845 x 1250 x 505mm (H x W x D)
Nett Weight	83.5 kg
Packaged Weight	84 kg

Product Details

Country of Origin	Republic of Ireland
Product Material	Mdf Vinyl Textured Woodgrain
Colour/Finish	Storm Grey
Mount Type	Floor
Style	Traditional
Handle Type	Knob
Construction Method	Cam & Wood Dowel
Construction Type	Rigid
Fascia Finish	Mdf Vinyl Textured Woodgrain
Fsc Certified	Yes
Handles Included	Yes
Inner Bowl Height	160 mm
Material Thickness	18 mm
No. Doors	4
No. Of Tapholes	1
No. Shelves	2
Number Of Bowls	2
Number Of Shelves	2
Overflow Cover Included	No
Overflow Included	No
Tap Included	No
Waste Included	No
Waste Shroud	No

© ROXOR Group

Sales Code: LOM233 **Barcode:** 5056211819080 **Brand:** Old London **Description:** Old London 1 Tap Hole 1200mm Black Double Bowl Marble Top Basin



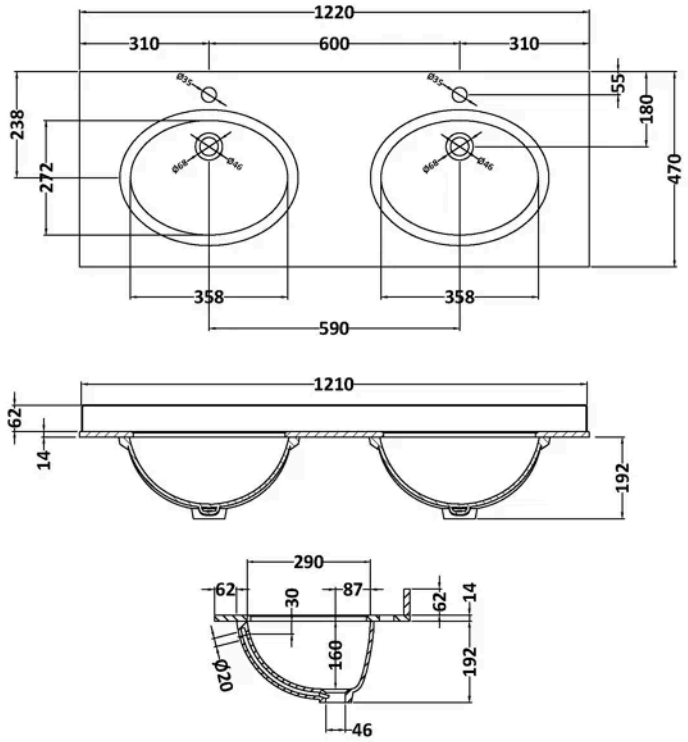

Product Dimensions

Product	268 x 1220 x 463mm (H x W x D)
Packaged	310 x 1300 x 550mm (H x W x D)
Nett Weight	27.5 kg
Packaged Weight	28 kg

Packaging Details

Box Qty	1

Product Details

Country of Origin	China
Product Material	Vitreous China
Colour/Finish	Black
Inner Bowl Height	160 mm
No. Of Tapholes	1
Number Of Bowls	2

© ROXOR Group

Sales Code: LON209 **Barcode:** 5056211818052 **Brand:** Old London **Description:** Old London 1200mm Storm Grey 4 Door Floor Standing Vanity Unit



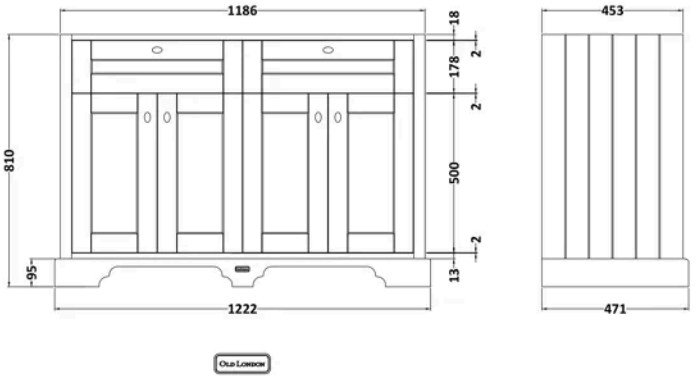

Product Dimensions

Product	810 x 1222 x 473mm (H x W x D)
Packaged	840 x 1252 x 511mm (H x W x D)
Nett Weight	56.5 kg
Packaged Weight	57 kg

Packaging Details

Box Qty	1

Product Details

Country of Origin	Republic of Ireland
Product Material	Mdf Vinyl Textured Woodgrain
Colour/Finish	Storm Grey
Mount Type	Floor
Style	Traditional
Handle Type	Knob
Construction Method	Cam & Wood Dowel
Construction Type	Rigid
Fascia Finish	Mdf Vinyl Textured Woodgrain
Handles Included	Yes
Material Thickness	18 mm
No. Doors	4
No. Shelves	1
Number Of Shelves	1
Waste Shroud	No

© ROXOR Group