Sales Code: LOF235 **Barcode:** 5056211819431 **Brand:** Old London **Description:** Old London 800mm Storm Grey 2 Door Floor Standing Cabinet With 3 Tap Holes Basin



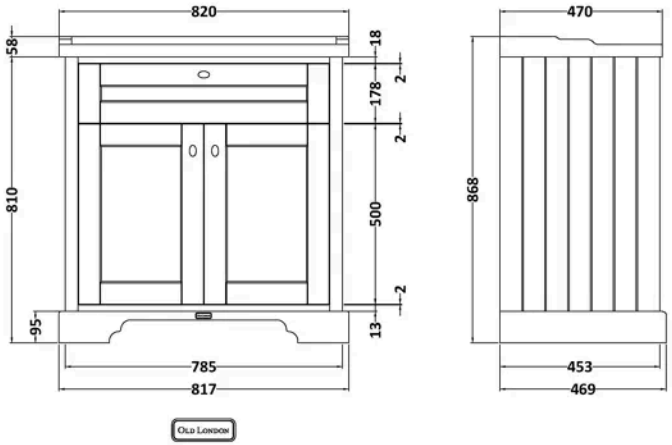

Product Dimensions

Product	868 x 820 x 470mm (H x W x D)
Packaged	845 x 860 x 505mm (H x W x D)
Nett Weight	56 kg
Packaged Weight	56.5 kg

Product Details

Country of Origin	Republic of Ireland
Product Material	Mdf Vinyl Textured Woodgrain
Colour/Finish	Storm Grey
Mount Type	Floor
Style	Traditional
Handle Type	Knob
Construction Method	Cam & Wood Dowel
Construction Type	Rigid
Fascia Finish	Mdf Vinyl Textured Woodgrain
Fsc Certified	Yes
Handles Included	Yes
Inner Bowl Height	130 mm
Material Thickness	18 mm
No. Doors	2
No. Of Tapholes	3
No. Shelves	1
Number Of Bowls	1
Number Of Shelves	1
Overflow Cover Included	No
Overflow Included	No
Tap Included	No
Waste Included	No
Waste Shroud	No

© ROXOR Group

Sales Code: LON205 **Barcode:** 5056211818021 **Brand:** Old London **Description:** Old London 800mm Storm Grey 2 Door Floor Standing Vanity Unit



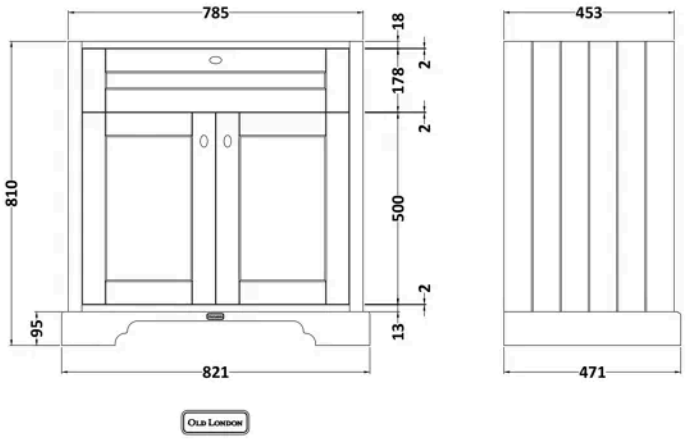

Product Dimensions

Product	810 x 821 x 473mm (H x W x D)
Packaged	851 x 854 x 511mm (H x W x D)
Nett Weight	35.5 kg
Packaged Weight	36 kg

Packaging Details

Box Qty	1

Product Details

Country of Origin	Republic of Ireland
Product Material	Mdf Vinyl Textured Woodgrain
Colour/Finish	Storm Grey
Mount Type	Floor
Style	Traditional
Handle Type	Knob
Construction Method	Cam & Wood Dowel
Construction Type	Rigid
Fascia Finish	Mdf Vinyl Textured Woodgrain
Handles Included	Yes
Material Thickness	18 mm
No. Doors	2
No. Shelves	1
Number Of Shelves	1
Waste Shroud	No

© ROXOR Group

Sales Code: NLV035 **Barcode:** 5055275830031 **Brand:** nuie **Description:** 3 Tap Hole 800mm Traditional Ceramic Basin



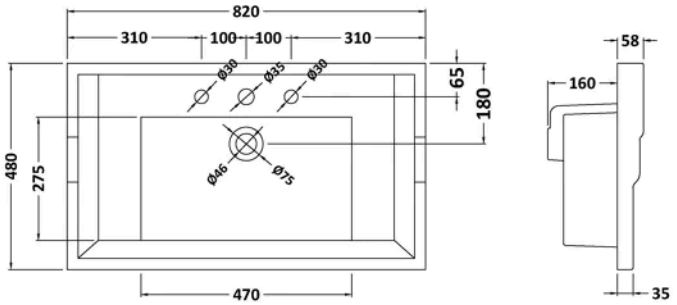

Product Dimensions

Product	218 x 820 x 480mm (H x W x D)
Packaged	260 x 840 x 500mm (H x W x D)
Nett Weight	21 kg
Packaged Weight	22 kg

Packaging Details

Box Qty	1

Product Details

Country of Origin	China
Product Material	Vitreous China
Colour/Finish	White
Ce Certified	Yes
Inner Bowl Height	130 mm
No. Of Tapholes	3
Number Of Bowls	1

© ROXOR Group