**Sales Code:** LOF227

**Barcode:** 5056211819646

**Brand:** Old London

**Description:** Old London 800mm Storm Grey 2 Door Floor Standing Cabinet With 1 Tap Hole Marble Basin



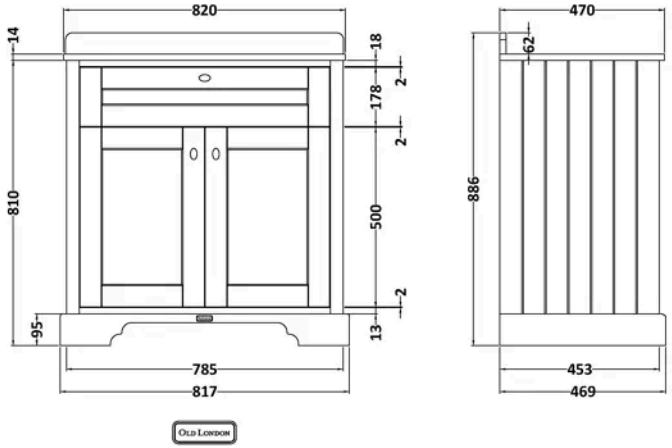


## Product Dimensions

| | |
|---|---|
| Product | 886 x 820 x 470mm (H x W x D) |
| Packaged | 845 x 860 x 505mm (H x W x D) |
| Nett Weight | 53 kg |
| Packaged Weight | 53.5 kg |

## Product Details

| | |
|---|---|
| Country of Origin | Republic of Ireland |
| Product Material | Mdf Vinyl Textured Woodgrain |
| Colour/Finish | Storm Grey |
| Mount Type | Floor |
| Style | Traditional |
| Handle Type | Knob |
| Construction Method | Cam & Wood Dowel |
| Construction Type | Rigid |
| Fascia Finish | Mdf Vinyl Textured Woodgrain |
| Fsc Certified | Yes |
| Handles Included | Yes |
| Inner Bowl Height | 160 mm |
| Material Thickness | 18 mm |
| No. Doors | 2 |
| No. Of Tapholes | 1 |
| No. Shelves | 1 |
| Number Of Bowls | 1 |
| Number Of Shelves | 1 |
| Overflow Cover Included | No |
| Overflow Included | No |
| Tap Included | No |
| Waste Included | No |
| Waste Shroud | No |

© ROXOR Group

**Sales Code:** LOM227 **Barcode:** 5056211819028 **Brand:** Old London **Description:** Old London 1 Tap Hole 800mm Black Single Bowl Marble Top Basin



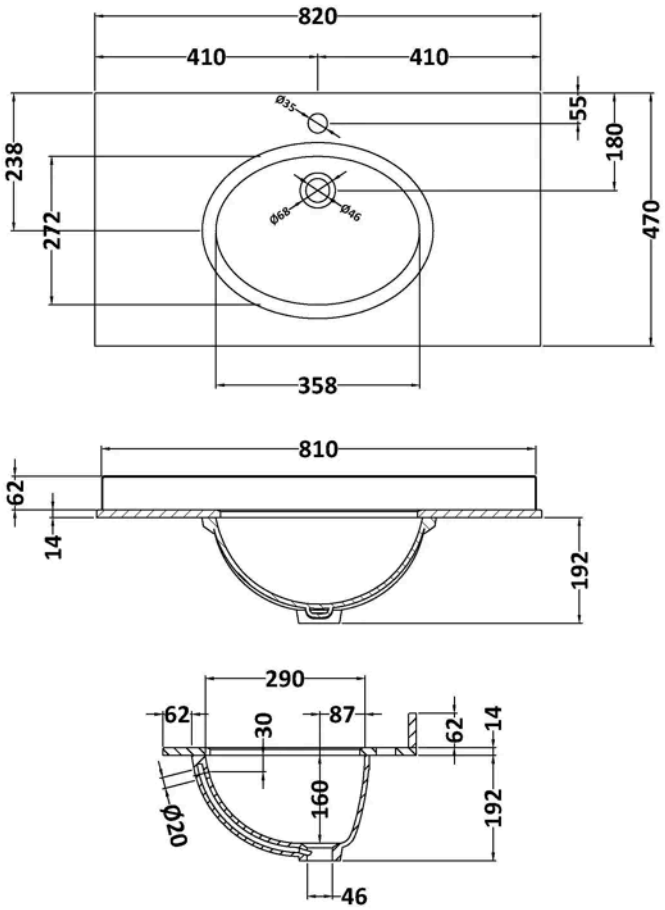


## Product Dimensions

| | |
|---|---|
| Product | 268 x 820 x 463mm (H x W x D) |
| Packaged | 310 x 900 x 550mm (H x W x D) |
| Nett Weight | 18 kg |
| Packaged Weight | 18.5 kg |

## Packaging Details

| | |
|---|---|
| Box Qty | 1 |

## Product Details

| | |
|---|---|
| Country of Origin | China |
| Product Material | Vitreous China |
| Colour/Finish | Black |
| Inner Bowl Height | 160 mm |
| No. Of Tapholes | 1 |
| Number Of Bowls | 1 |

© ROXOR Group

**Sales Code:** LON205 **Barcode:** 5056211818021 **Brand:** Old London **Description:** Old London 800mm Storm Grey 2 Door Floor Standing Vanity Unit



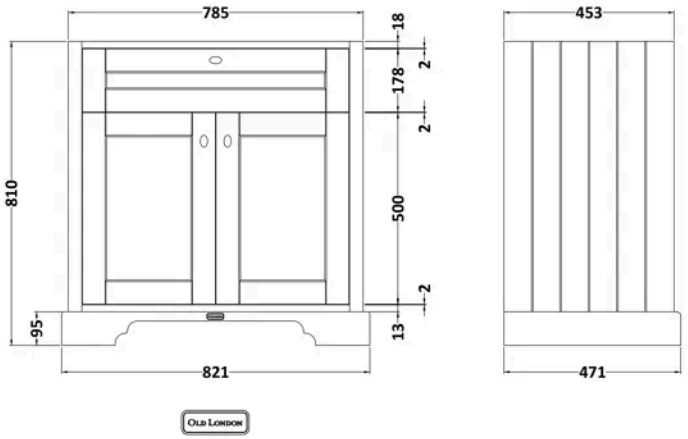


## Product Dimensions

| | |
|---|---|
| Product | 810 x 821 x 473mm (H x W x D) |
| Packaged | 851 x 854 x 511mm (H x W x D) |
| Nett Weight | 35.5 kg |
| Packaged Weight | 36 kg |

## Packaging Details

| | |
|---|---|
| Box Qty | 1 |

## Product Details

| | |
|---|---|
| Country of Origin | Republic of Ireland |
| Product Material | Mdf Vinyl Textured Woodgrain |
| Colour/Finish | Storm Grey |
| Mount Type | Floor |
| Style | Traditional |
| Handle Type | Knob |
| Construction Method | Cam & Wood Dowel |
| Construction Type | Rigid |
| Fascia Finish | Mdf Vinyl Textured Woodgrain |
| Handles Included | Yes |
| Material Thickness | 18 mm |
| No. Doors | 2 |
| No. Shelves | 1 |
| Number Of Shelves | 1 |
| Waste Shroud | No |

© ROXOR Group