**Sales Code:** LIL3826M **Barcode:** 5064007075428 **Brand:** nuie **Description:** nuie Lille Mocha Oak 800mm 2 Drawer Wall Hung Vanity Unit With 3 Tap Holes Fireclay Basin



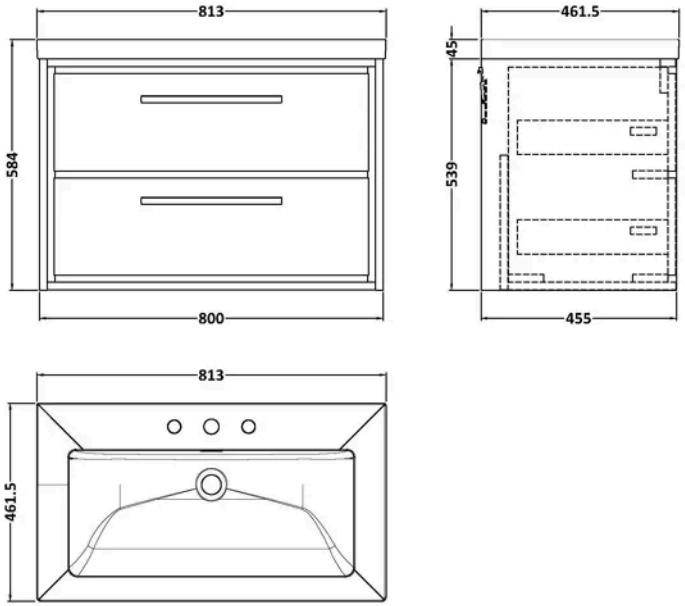


## Product Dimensions

| | |
|---|---|
| Product | 584 x 813 x 462mm (H x W x D) |
| Packaged | 540 x 800 x 455mm (H x W x D) |
| Nett Weight | 60 kg |
| Packaged Weight | 60.5 kg |

## Product Details

| | |
|---|---|
| Country of Origin | China |
| Product Material | Fireclay,Mfc Textured Woodgrain |
| Colour/Finish | Mocha Oak |
| Mount Type | Wall Hung |
| Style | Contemporary |
| Handle Type | D Shape |
| Fixings Included | Yes |
| Construction Method | Cam & Wood Dowel |
| Construction Type | Rigid |
| Drawer Type | 80mm High Metal S/C Inc Gallery |
| Fascia Finish | Mfc Textured Woodgrain |
| Fsc Certified | Yes |
| Handles Included | Yes |
| Inner Bowl Depth | 295 mm |
| Inner Bowl Height | 134 mm |
| Inner Bowl Width | 680 mm |
| Leg Set Included | No |
| Material Thickness | 18 mm |
| No. Doors | 2 |
| No. Drawers | 2 |
| No. Of Tapholes | 3 |
| Number Of Bowls | 1 |
| Overflow Cover Included | Yes |
| Overflow Included | Yes |
| Tap Included | No |
| Waste Included | No |
| Waste Shroud | Yes |

© ROXOR Group

**Sales Code:** CBM635 **Barcode:** 5056678485279 **Brand:** nuie **Description:** 3 Tap Hole 800mm Contemporary Fireclay Basin



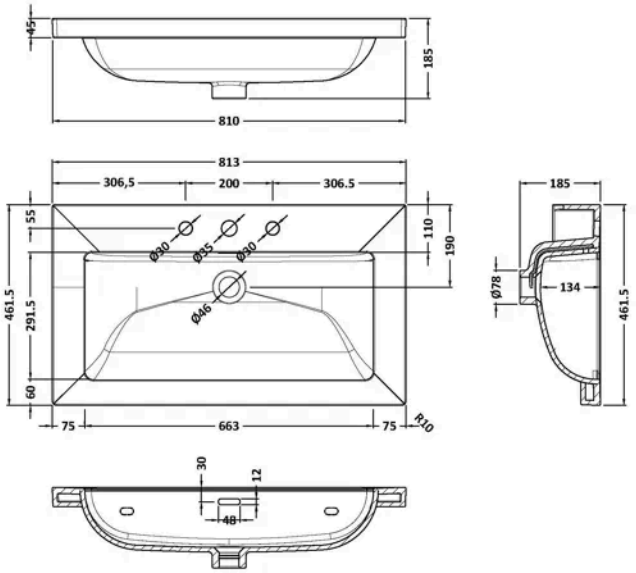


## Product Dimensions

| | |
|---|---|
| Product | 45 x 810 x 460mm (H x W x D) |
| Packaged | 490 x 850 x 220mm (H x W x D) |
| Nett Weight | 21.5 kg |
| Packaged Weight | 21.5 kg |

## Packaging Details

| | |
|---|---|
| Box Qty | 1 |
| Label Size (mm) | 100 x 50 |
| Label Colour | White |
| Label Qty | 2.0000 |

## Product Details

| | |
|---|---|
| Country of Origin | United Arab Emirates |
| Product Material | Fireclay |
| Colour/Finish | White |
| Style | Contemporary |
| Fixings Included | No |
| Bottle Trap Included | No |
| Ce Certified | Yes |
| Inner Bowl Depth | 295 mm |
| Inner Bowl Height | 134 mm |
| Inner Bowl Width | 680 mm |
| No. Of Tapholes | 3 |
| Number Of Bowls | 1 |
| Overflow Cover Included | No |
| Overflow Included | Yes |
| Tap Included | No |
| Waste Included | No |

© ROXOR Group

**Sales Code:** NFF3826 **Barcode:** 5064007067232 **Brand:** nuie **Description:** nuie Lille 800mm Mocha Oak 2 Drawer Wall Hung Vanity Unit



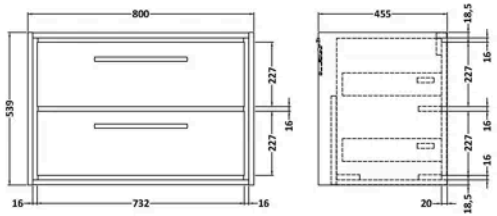


## Product Dimensions

| | |
|---|---|
| Product | 539 x 800 x 455mm (H x W x D) |
| Packaged | 577 x 832 x 480mm (H x W x D) |
| Nett Weight | 39 kg |
| Packaged Weight | 39.5 kg |

## Packaging Details

| | |
|---|---|
| Label Colour | White |
| Label Qty | 2.0000 |

## Product Details

| | |
|---|---|
| Country of Origin | China |
| Product Material | Mfc Textured Woodgrain |
| Colour/Finish | Mocha Oak |
| Mount Type | Wall Hung |
| Style | Contemporary |
| Handle Type | D Shape |
| Fixings Included | Yes |
| Construction Method | Cam & Wood Dowel |
| Construction Type | Rigid |
| Drawer Type | 80mm High Metal S/C Inc Gallery |
| Fascia Finish | Mfc Textured Woodgrain |
| Fsc Certified | Yes |
| Handles Included | Yes |
| Material Thickness | 18 mm |
| No. Drawers | 2 |
| Waste Shroud | Yes |

© ROXOR Group