Sales Code: LIL3825M **Barcode:** 5064007075268 **Brand:** nuie **Description:** nuie Lille Mocha Oak 800mm 1 Drawer Wall Hung Vanity Unit With 3 Tap Holes Fireclay Basin



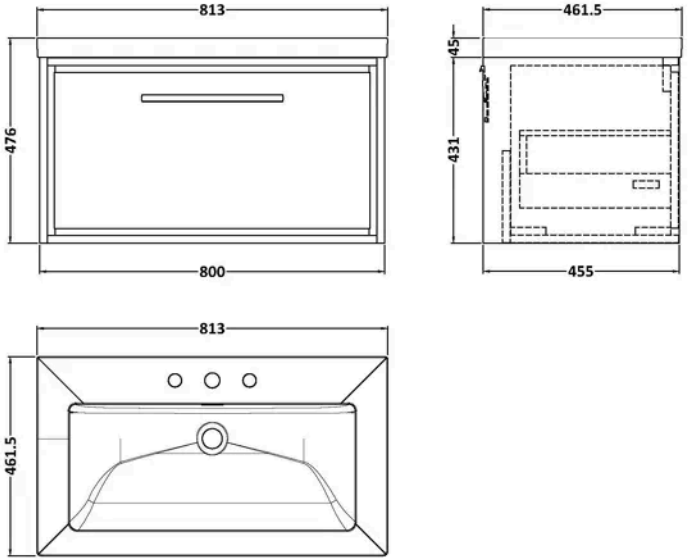

Product Dimensions

Product	476 x 813 x 462mm (H x W x D)
Packaged	431 x 800 x 455mm (H x W x D)
Nett Weight	51 kg
Packaged Weight	51.5 kg

Product Details

Country of Origin	China
Product Material	Fireclay,Mfc Textured Woodgrain
Colour/Finish	Mocha Oak
Mount Type	Wall Hung
Style	Contemporary
Handle Type	D Shape
Fixings Included	Yes
Construction Method	Cam & Wood Dowel
Construction Type	Rigid
Drawer Type	80mm High Metal S/C Inc Gallery
Fascia Finish	Mfc Textured Woodgrain
Fsc Certified	Yes
Handles Included	Yes
Inner Bowl Depth	295 mm
Inner Bowl Height	134 mm
Inner Bowl Width	680 mm
Leg Set Included	No
Material Thickness	18 mm
No. Doors	1
No. Drawers	1
No. Of Tapholes	3
Number Of Bowls	1
Overflow Cover Included	Yes
Overflow Included	Yes
Tap Included	No
Waste Included	No
Waste Shroud	Yes

© ROXOR Group

Sales Code: CBM635 **Barcode:** 5056678485279 **Brand:** nuie **Description:** 3 Tap Hole 800mm Contemporary Fireclay Basin



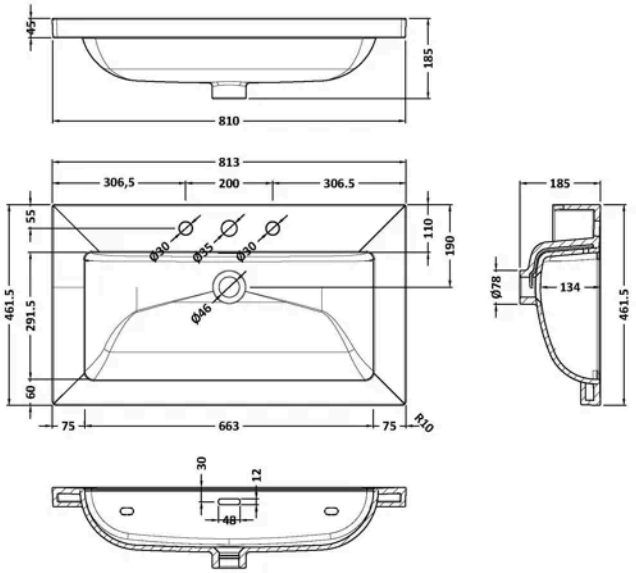

Product Dimensions

Product	45 x 810 x 460mm (H x W x D)
Packaged	490 x 850 x 220mm (H x W x D)
Nett Weight	21.5 kg
Packaged Weight	21.5 kg

Packaging Details

Box Qty	1
Label Size (mm)	100 x 50
Label Colour	White
Label Qty	2.0000

Product Details

Country of Origin	United Arab Emirates
Product Material	Fireclay
Colour/Finish	White
Style	Contemporary
Fixings Included	No
Bottle Trap Included	No
Ce Certified	Yes
Inner Bowl Depth	295 mm
Inner Bowl Height	134 mm
Inner Bowl Width	680 mm
No. Of Tapholes	3
Number Of Bowls	1
Overflow Cover Included	No
Overflow Included	Yes
Tap Included	No
Waste Included	No

© ROXOR Group

Sales Code: NFF3825 **Barcode:** 5064007067225 **Brand:** nuie **Description:** nuie Lille 800mm Mocha Oak 1 Drawer Wall Hung Vanity Unit



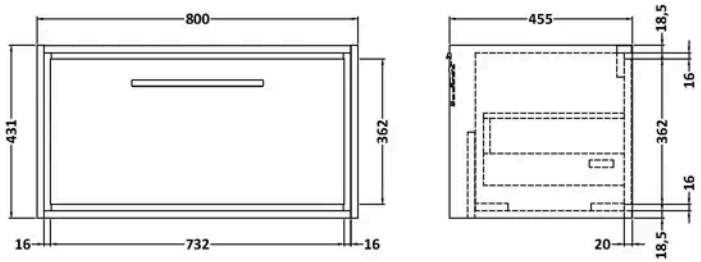

Product Dimensions

Product	431 x 800 x 455mm (H x W x D)
Packaged	470 x 832 x 480mm (H x W x D)
Nett Weight	30 kg
Packaged Weight	30.5 kg

Packaging Details

Label Colour	White
Label Qty	2.0000

Product Details

Country of Origin	China
Product Material	Mfc Textured Woodgrain
Colour/Finish	Mocha Oak
Mount Type	Wall Hung
Style	Contemporary
Handle Type	D Shape
Fixings Included	Yes
Construction Method	Cam & Wood Dowel
Construction Type	Rigid
Drawer Type	80mm High Metal S/C Inc Gallery
Fascia Finish	Mfc Textured Woodgrain
Fsc Certified	Yes
Handles Included	Yes
Material Thickness	18 mm
No. Drawers	1
Waste Shroud	Yes

© ROXOR Group