Sales Code: LIL3825LCM-S

Barcode: 5064007075251

Brand: nuie

Description: nuie Lille 800mm Mocha Oak 1 Drawer Wall Hung Vanity With Carrara Laminate Worktop And Shelf



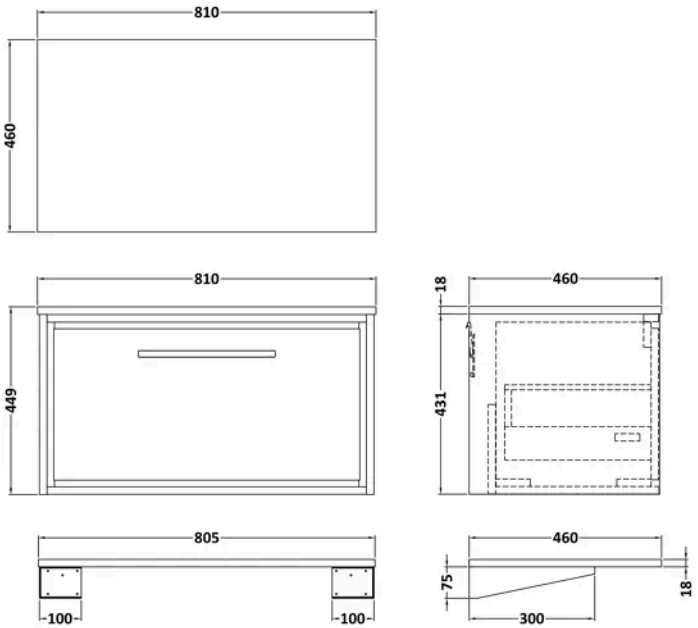

Product Dimensions

Product	453 x 805 x 460mm (H x W x D)
Packaged	431 x 800 x 455mm (H x W x D)
Nett Weight	32.8 kg
Packaged Weight	33.3 kg

Product Details

Country of Origin	China
Product Material	Mfc Textured Woodgrain
Colour/Finish	Mocha Oak
Mount Type	Wall Hung
Style	Contemporary
Handle Type	D Shape
Fixings Included	Yes
Construction Method	Cam & Wood Dowel
Construction Type	Rigid
Drawer Type	80mm High Metal S/C Inc Gallery
Fascia Finish	Mfc Textured Woodgrain
Fsc Certified	Yes
Handles Included	Yes
Material Thickness	18 mm
No. Doors	1
No. Drawers	1
No. Shelves	1
Number Of Shelves	1
Waste Shroud	Yes

© ROXOR Group

Sales Code: 154048SB **Barcode:** 5056462654942 **Brand:** nuie **Description:** Dark Grey Shelf Support Brackets



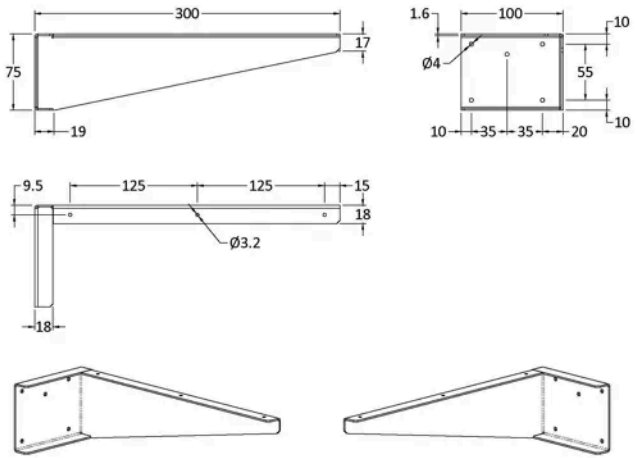

Product Dimensions

Product	300 x 100 x 50mm (H x W x D)
Packaged	90 x 130 x 330mm (H x W x D)
Nett Weight	0.72 kg
Packaged Weight	0.72 kg

Product Details

Country of Origin	China
Product Material	Stainless Steel
Colour/Finish	Dark Grey
Style	Contemporary

© ROXOR Group

Sales Code: LCM8046 **Barcode:** 5056817724382 **Brand:** nuie **Description:** Laminate Worktop 805x460x22mm



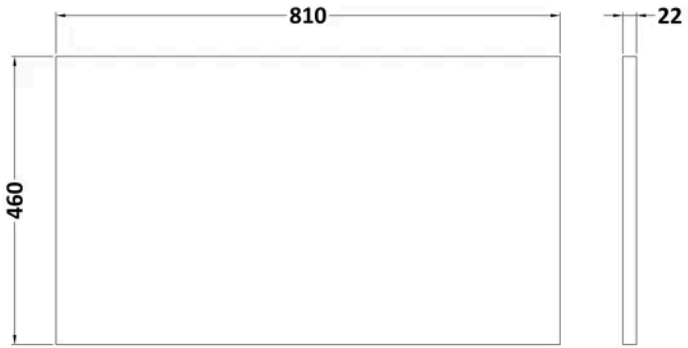

Product Dimensions

Product	22 x 805 x 460mm (H x W x D)
Packaged	20 x 520 x 810mm (H x W x D)
Nett Weight	3 kg
Packaged Weight	3 kg

Packaging Details

Box Qty	1

Product Details

Country of Origin	United Kingdom
Product Material	Mfc Laminated
Colour/Finish	Carrera Marble
Style	Contemporary

© ROXOR Group

Sales Code: MWT3880 **Barcode:** 5064007074681 **Brand:** nuie **Description:** Mocha Oak 805 x 460mm Woodgrain MFC Worktop



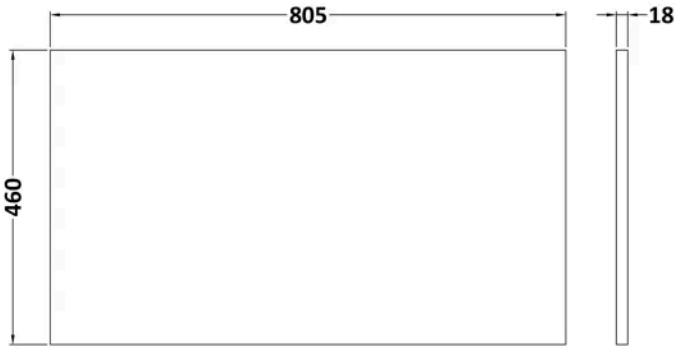

Product Dimensions

Product	18 x 805 x 460mm (H x W x D)
Packaged	25 x 825 x 465mm (H x W x D)
Nett Weight	3.3 kg
Packaged Weight	3.8 kg

Packaging Details

Label Size (mm)	50 x 100
Label Colour	White
Label Qty	1.0000

Product Details

Country of Origin	United Kingdom
Product Material	Mfc Textured Woodgrain
Colour/Finish	Mocha Oak
Style	Contemporary
Fixings Included	Yes
Fsc Certified	Yes
Material Thickness	18 mm

© ROXOR Group

Sales Code: NFF3825 **Barcode:** 5064007067225 **Brand:** nuie **Description:** nuie Lille 800mm Mocha Oak 1 Drawer Wall Hung Vanity Unit



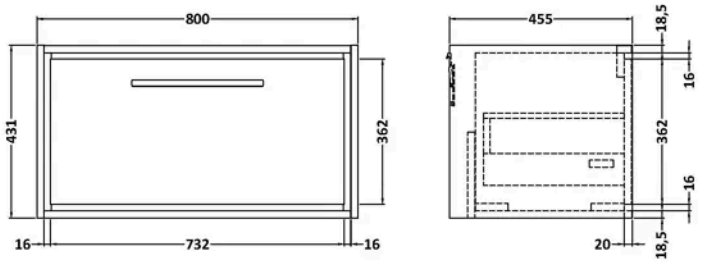

Product Dimensions

Product	431 x 800 x 455mm (H x W x D)
Packaged	470 x 832 x 480mm (H x W x D)
Nett Weight	30 kg
Packaged Weight	30.5 kg

Packaging Details

Label Colour	White
Label Qty	2.0000

Product Details

Country of Origin	China
Product Material	Mfc Textured Woodgrain
Colour/Finish	Mocha Oak
Mount Type	Wall Hung
Style	Contemporary
Handle Type	D Shape
Fixings Included	Yes
Construction Method	Cam & Wood Dowel
Construction Type	Rigid
Drawer Type	80mm High Metal S/C Inc Gallery
Fascia Finish	Mfc Textured Woodgrain
Fsc Certified	Yes
Handles Included	Yes
Material Thickness	18 mm
No. Drawers	1
Waste Shroud	Yes

© ROXOR Group