**Sales Code:** LIL3825LBG-S

**Barcode:** 5064007075244

**Brand:** nuie

**Description:** nuie Lille 800mm Mocha Oak 1 Drawer Wall Hung Vanity With Bellato Grey Worktop And Shelf



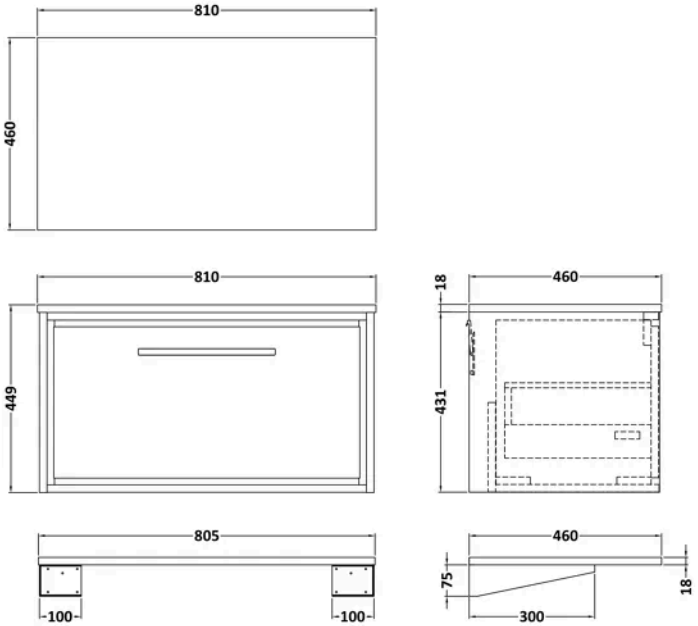


## Product Dimensions

| | |
|---|---|
| Product | 453 x 805 x 460mm (H x W x D) |
| Packaged | 431 x 800 x 455mm (H x W x D) |
| Nett Weight | 32.8 kg |
| Packaged Weight | 33.3 kg |

## Product Details

| | |
|---|---|
| Country of Origin | China |
| Product Material | Mfc Textured Woodgrain |
| Colour/Finish | Mocha Oak |
| Mount Type | Wall Hung |
| Style | Contemporary |
| Handle Type | D Shape |
| Fixings Included | Yes |
| Construction Method | Cam & Wood Dowel |
| Construction Type | Rigid |
| Drawer Type | 80mm High Metal S/C Inc Gallery |
| Fascia Finish | Mfc Textured Woodgrain |
| Fsc Certified | Yes |
| Handles Included | Yes |
| Material Thickness | 18 mm |
| No. Doors | 1 |
| No. Drawers | 1 |
| No. Shelves | 1 |
| Number Of Shelves | 1 |
| Waste Shroud | Yes |

© ROXOR Group

**Sales Code:** 154048SB **Barcode:** 5056462654942 **Brand:** nuie **Description:** Dark Grey Shelf Support Brackets



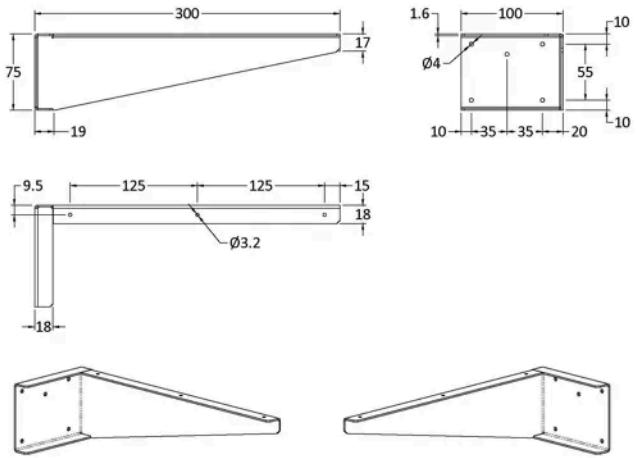


## Product Dimensions

| | |
|---|---|
| Product | 300 x 100 x 50mm (H x W x D) |
| Packaged | 90 x 130 x 330mm (H x W x D) |
| Nett Weight | 0.72 kg |
| Packaged Weight | 0.72 kg |

## Product Details

| | |
|---|---|
| Country of Origin | China |
| Product Material | Stainless Steel |
| Colour/Finish | Dark Grey |
| Style | Contemporary |

© ROXOR Group

**Sales Code:** LBG8046 **Barcode:** 5056817724375 **Brand:** nuie **Description:** Laminate Worktop 805x460x22mm

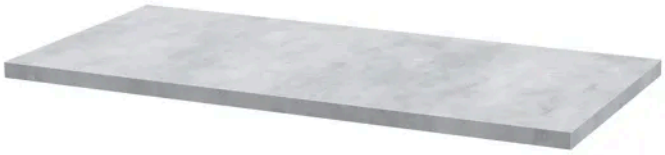

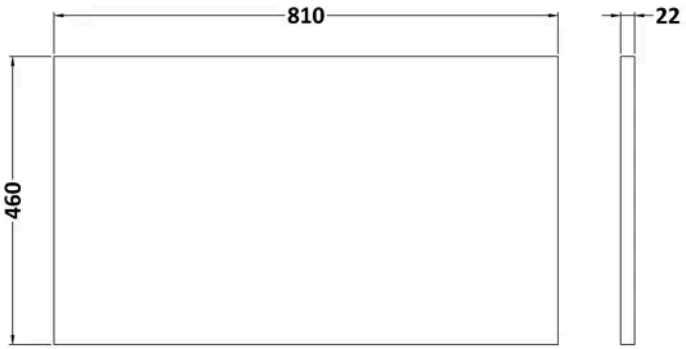


## Product Dimensions

| | |
|---|---|
| Product | 22 x 805 x 460mm (H x W x D) |
| Packaged | 20 x 520 x 810mm (H x W x D) |
| Nett Weight | 3 kg |
| Packaged Weight | 3 kg |

## Packaging Details

| | |
|---|---|
| Box Qty | 1 |

## Product Details

| | |
|---|---|
| Country of Origin | United Kingdom |
| Product Material | Mfc Laminated |
| Colour/Finish | Bellato Grey |
| Style | Contemporary |

© ROXOR Group

**Sales Code:** MWT3880 **Barcode:** 5064007074681 **Brand:** nuie **Description:** Mocha Oak 805 x 460mm Woodgrain MFC Worktop



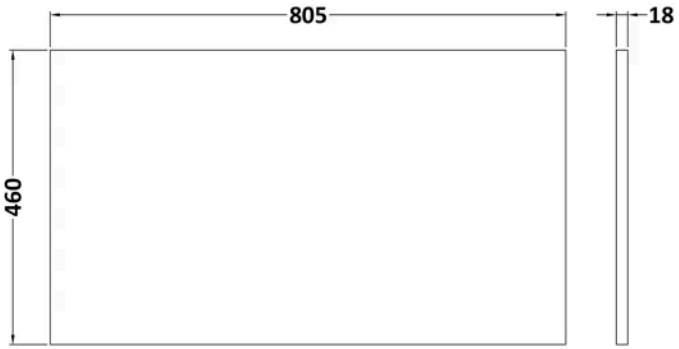


## Product Dimensions

| | |
|---|---|
| Product | 18 x 805 x 460mm (H x W x D) |
| Packaged | 25 x 825 x 465mm (H x W x D) |
| Nett Weight | 3.3 kg |
| Packaged Weight | 3.8 kg |

## Packaging Details

| | |
|---|---|
| Label Size (mm) | 50 x 100 |
| Label Colour | White |
| Label Qty | 1.0000 |

## Product Details

| | |
|---|---|
| Country of Origin | United Kingdom |
| Product Material | Mfc Textured Woodgrain |
| Colour/Finish | Mocha Oak |
| Style | Contemporary |
| Fixings Included | Yes |
| Fsc Certified | Yes |
| Material Thickness | 18 mm |

© ROXOR Group

**Sales Code:** NFF3825 **Barcode:** 5064007067225 **Brand:** nuie **Description:** nuie Lille 800mm Mocha Oak 1 Drawer Wall Hung Vanity Unit



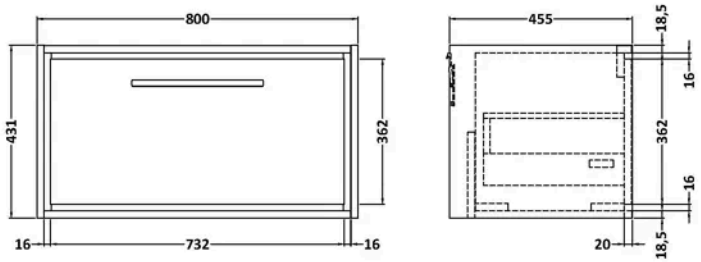


## Product Dimensions

| | |
|---|---|
| Product | 431 x 800 x 455mm (H x W x D) |
| Packaged | 470 x 832 x 480mm (H x W x D) |
| Nett Weight | 30 kg |
| Packaged Weight | 30.5 kg |

## Packaging Details

| | |
|---|---|
| Label Colour | White |
| Label Qty | 2.0000 |

## Product Details

| | |
|---|---|
| Country of Origin | China |
| Product Material | Mfc Textured Woodgrain |
| Colour/Finish | Mocha Oak |
| Mount Type | Wall Hung |
| Style | Contemporary |
| Handle Type | D Shape |
| Fixings Included | Yes |
| Construction Method | Cam & Wood Dowel |
| Construction Type | Rigid |
| Drawer Type | 80mm High Metal S/C Inc Gallery |
| Fascia Finish | Mfc Textured Woodgrain |
| Fsc Certified | Yes |
| Handles Included | Yes |
| Material Thickness | 18 mm |
| No. Drawers | 1 |
| Waste Shroud | Yes |

© ROXOR Group