Sales Code: LIL3824W2 **Barcode:** 5064007075107 **Brand:** nuie **Description:** nuie Lille Mocha Oak 1200mm 4 Drawer Wall Hung Vanity Unit With Co-ordinating Worktop



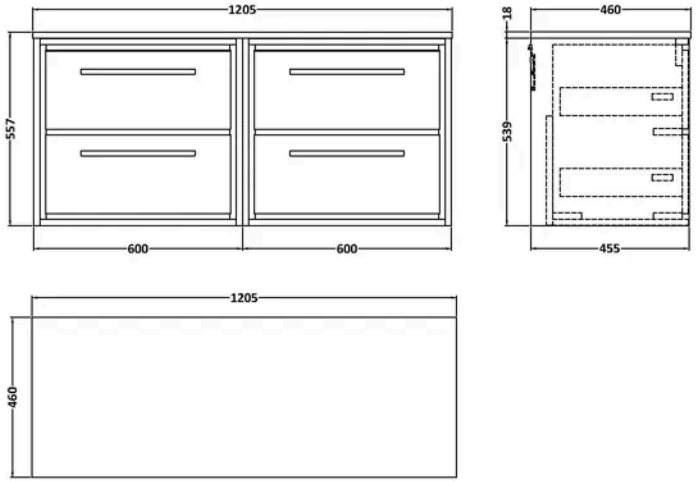

Product Dimensions

Product	557 x 1205 x 460mm (H x W x D)
Packaged	540 x 1200 x 455mm (H x W x D)
Nett Weight	62.7 kg
Packaged Weight	63.2 kg

Product Details

Country of Origin	China
Product Material	Mfc Textured Woodgrain
Colour/Finish	Mocha Oak
Mount Type	Wall Hung
Style	Contemporary
Handle Type	D Shape
Fixings Included	Yes
Construction Method	Cam & Wood Dowel
Construction Type	Rigid
Drawer Type	80mm High Metal S/C Inc Gallery
Fascia Finish	Mfc Textured Woodgrain
Fsc Certified	Yes
Handles Included	Yes
Material Thickness	18 mm
No. Doors	4
No. Drawers	4
Waste Shroud	Yes

© ROXOR Group

Sales Code: MWT3820 **Barcode:** 5064007074704 **Brand:** nuie **Description:** Mocha Oak 1205 x 460mm Woodgrain MFC Worktop



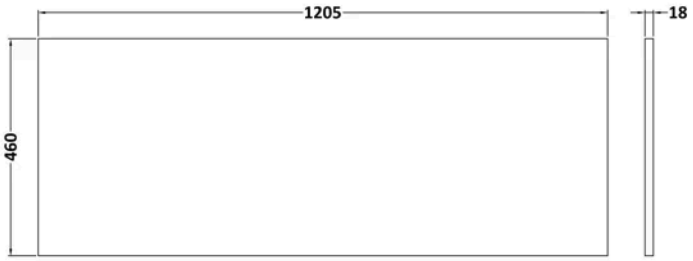

Product Dimensions

Product	18 x 1205 x 460mm (H x W x D)
Packaged	25 x 1225 x 465mm (H x W x D)
Nett Weight	5.2 kg
Packaged Weight	5.7 kg

Product Details

Country of Origin	United Kingdom
Product Material	Mfc Textured Woodgrain
Colour/Finish	Mocha Oak
Style	Contemporary
Fixings Included	Yes
Fsc Certified	Yes
Material Thickness	18 mm

© ROXOR Group

Sales Code: NFF3824 **Barcode:** 5064007067218 **Brand:** nuie **Description:** nuie Lille 600mm Mocha Oak 2 Drawer Wall Hung Vanity Unit



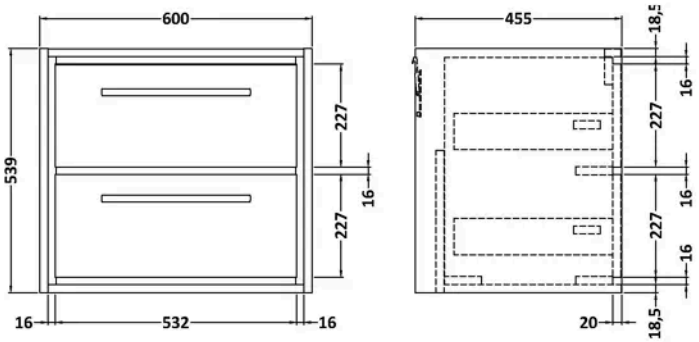

Product Dimensions

Product	539 x 600 x 455mm (H x W x D)
Packaged	577 x 632 x 480mm (H x W x D)
Nett Weight	29 kg
Packaged Weight	29.5 kg

Packaging Details

Label Colour	White
Label Qty	2.0000

Product Details

Country of Origin	China
Product Material	Mfc Textured Woodgrain
Colour/Finish	Mocha Oak
Mount Type	Wall Hung
Style	Contemporary
Handle Type	D Shape
Fixings Included	Yes
Construction Method	Cam & Wood Dowel
Construction Type	Rigid
Drawer Type	80mm High Metal S/C Inc Gallery
Fascia Finish	Mfc Textured Woodgrain
Fsc Certified	Yes
Handles Included	Yes
Material Thickness	18 mm
No. Drawers	2
Waste Shroud	Yes

© ROXOR Group