Sales Code: LIL3224W **Barcode:** 5056817716943 **Brand:** nuie **Description:** nuie Lille Pebble Grey 600mm 2 Drawer Wall Hung Vanity Unit With Co-ordinating Worktop



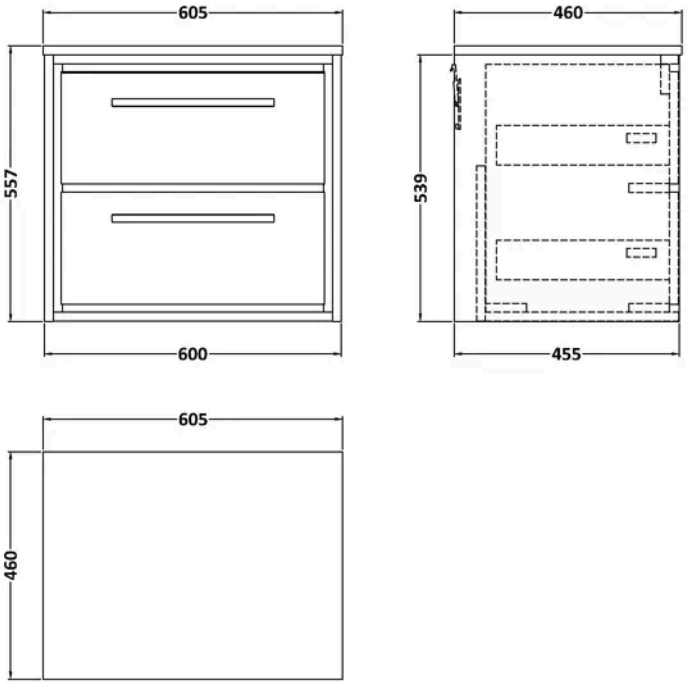

Product Dimensions

Product	557 x 605 x 460mm (H x W x D)
Packaged	577 x 620 x 480mm (H x W x D)
Nett Weight	31.2 kg
Packaged Weight	31.7 kg

Packaging Details

Box Qty	2

Product Details

Country of Origin	China
Product Material	Mfc Smooth Matt
Colour/Finish	Pebble Grey
Mount Type	Wall Hung
Style	Contemporary
Handle Type	D Shape
Fixings Included	Yes
Construction Method	Cam & Wood Dowel
Construction Type	Rigid
Drawer Type	80mm High Metal S/C Inc Gallery
Fascia Finish	Mfc Smooth Matt
Fsc Certified	Yes
Handles Included	Yes
Material Thickness	18 mm
No. Doors	2
No. Drawers	2
Waste Shroud	Yes

© ROXOR Group

Sales Code: MWD3260 **Barcode:** 5056678423684 **Brand:** Hudson Reed **Description:** 605 x 460mm Pebble Grey MFC Matt Furniture Worktop



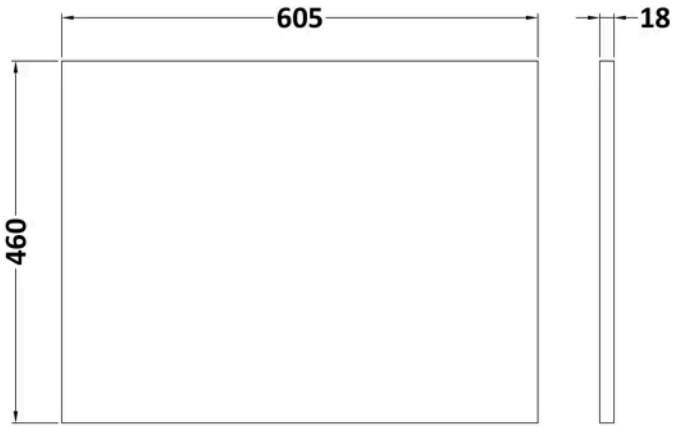

Product Dimensions

Product	18 x 605 x 460mm (H x W x D)
Packaged	20 x 610 x 465mm (H x W x D)
Nett Weight	2.7 kg
Packaged Weight	3 kg

Packaging Details

Box Qty	1

Product Details

Country of Origin	United Kingdom
Product Material	Mfc Smooth Matt
Colour/Finish	Pebble Grey
Style	Contemporary
Material Thickness	18 mm

© ROXOR Group

Sales Code: NFF3224 **Barcode:** 5056678423936 **Brand:** nuie **Description:** nuie Lille 600mm Pebble Grey 2 Drawer Wall Hung Vanity Unit



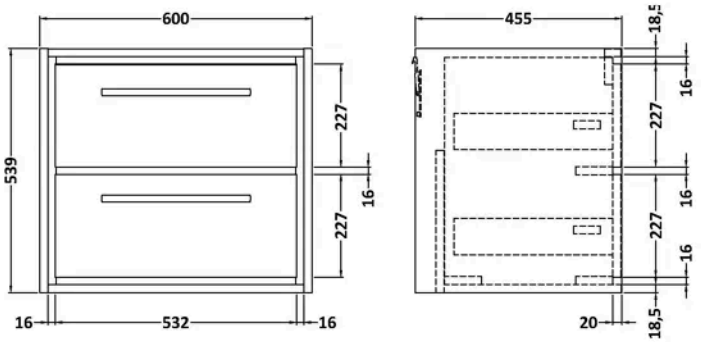

Product Dimensions

Product	539 x 600 x 455mm (H x W x D)
Packaged	577 x 632 x 480mm (H x W x D)
Nett Weight	29 kg
Packaged Weight	29.5 kg

Packaging Details

Box Qty	1
Label Colour	White
Label Qty	2.0000

Product Details

Country of Origin	China
Product Material	Mfc Smooth Matt
Colour/Finish	Pebble Grey
Mount Type	Wall Hung
Style	Contemporary
Handle Type	D Shape
Fixings Included	Yes
Construction Method	Cam & Wood Dowel
Construction Type	Rigid
Drawer Type	80mm High Metal S/C Inc Gallery
Fascia Finish	Mfc Smooth Matt
Fsc Certified	Yes
Handles Included	Yes
Material Thickness	18 mm
No. Drawers	2
Waste Shroud	Yes

© ROXOR Group