Sales Code: LIL3224GMT **Barcode:** 5056817717483 **Brand:** nuie **Description:** nuie Lille Pebble Grey 600mm 2 Drawer Wall Hung Vanity Unit With Grey Marble Worktop



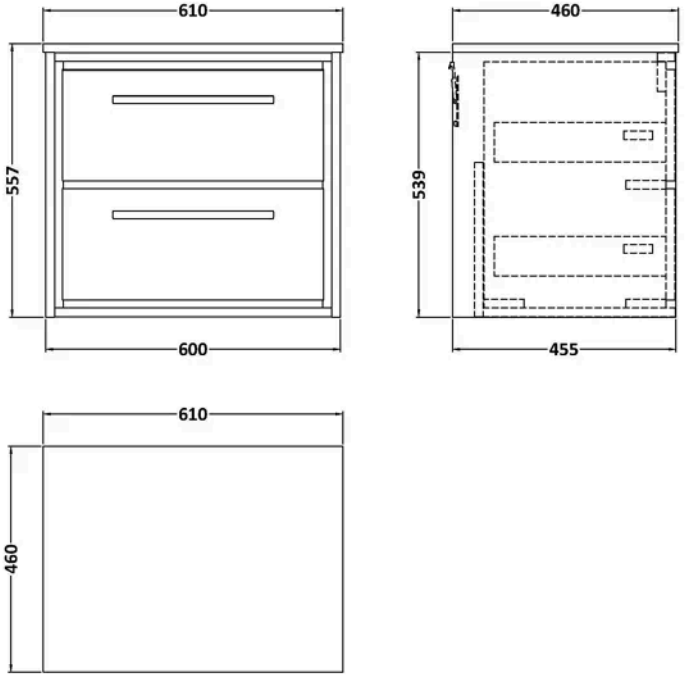

Product Dimensions

Product	557 x 610 x 460mm (H x W x D)
Packaged	577 x 620 x 480mm (H x W x D)
Nett Weight	42 kg
Packaged Weight	42.5 kg

Packaging Details

Box Qty	2

Product Details

Country of Origin	China
Product Material	Mfc Smooth Matt,Natural Marble
Colour/Finish	Pebble Grey
Mount Type	Wall Hung
Style	Contemporary
Handle Type	D Shape
Fixings Included	Yes
Construction Method	Cam & Wood Dowel
Construction Type	Rigid
Drawer Type	80mm High Metal S/C Inc Gallery
Fascia Finish	Mfc Smooth Matt
Fsc Certified	Yes
Handles Included	Yes
Material Thickness	18 mm
No. Doors	2
No. Drawers	2
Waste Shroud	Yes

© ROXOR Group

Sales Code: LOM36046 **Barcode:** 5056678477205 **Brand:** nuie **Description:** Hudson Reed 610x460mm Grey Marble Worktop



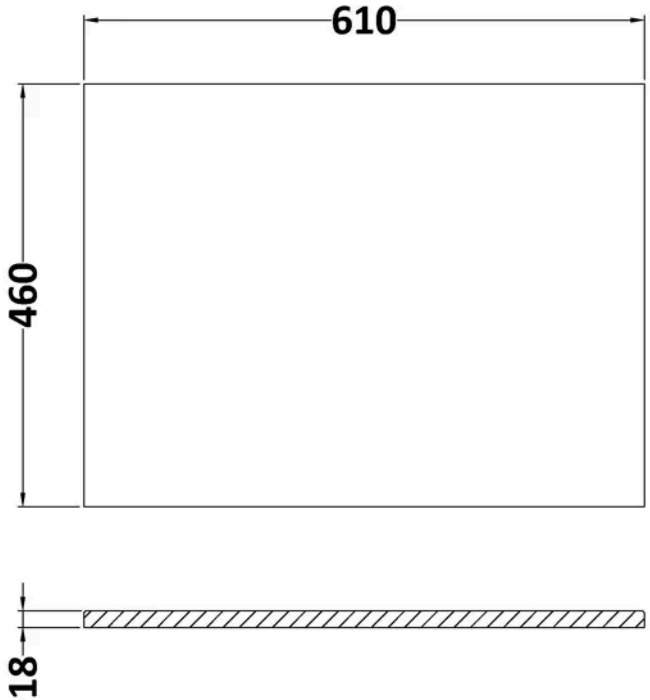

Product Dimensions

Product	18 x 610 x 460mm (H x W x D)
Packaged	35 x 650 x 500mm (H x W x D)
Nett Weight	13.5 kg
Packaged Weight	14 kg

Packaging Details

Box Qty	1
Label Size (mm)	50 x 100
Label Colour	White
Label Qty	1.0000

Product Details

Country of Origin	China
Product Material	Natural Marble
Colour/Finish	Grey
Style	Contemporary
Fixings Included	No
Fsc Certified	Yes
Material Thickness	18 mm

© ROXOR Group

Sales Code: NFF3224 **Barcode:** 5056678423936 **Brand:** nuie **Description:** nuie Lille 600mm Pebble Grey 2 Drawer Wall Hung Vanity Unit



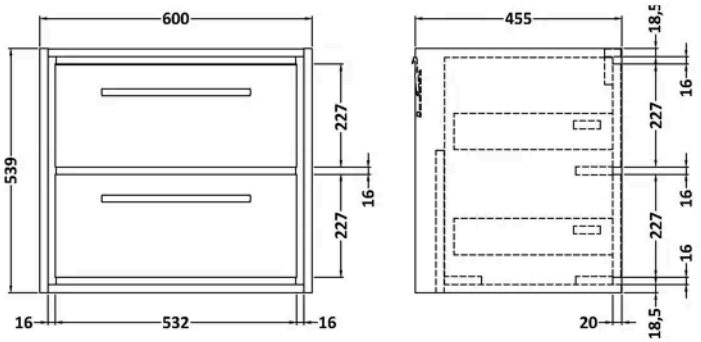

Product Dimensions

Product	539 x 600 x 455mm (H x W x D)
Packaged	577 x 632 x 480mm (H x W x D)
Nett Weight	29 kg
Packaged Weight	29.5 kg

Packaging Details

Box Qty	1
Label Colour	White
Label Qty	2.0000

Product Details

Country of Origin	China
Product Material	Mfc Smooth Matt
Colour/Finish	Pebble Grey
Mount Type	Wall Hung
Style	Contemporary
Handle Type	D Shape
Fixings Included	Yes
Construction Method	Cam & Wood Dowel
Construction Type	Rigid
Drawer Type	80mm High Metal S/C Inc Gallery
Fascia Finish	Mfc Smooth Matt
Fsc Certified	Yes
Handles Included	Yes
Material Thickness	18 mm
No. Drawers	2
Waste Shroud	Yes

© ROXOR Group