Sales Code: LIL3222LCM-S

Barcode: 5064007070713

Brand: nuie

Description: nuie Lille Pebble Grey 600mm 1 Drawer Wall Hung Vanity Unit With Carrara Laminate Worktop and Shelf



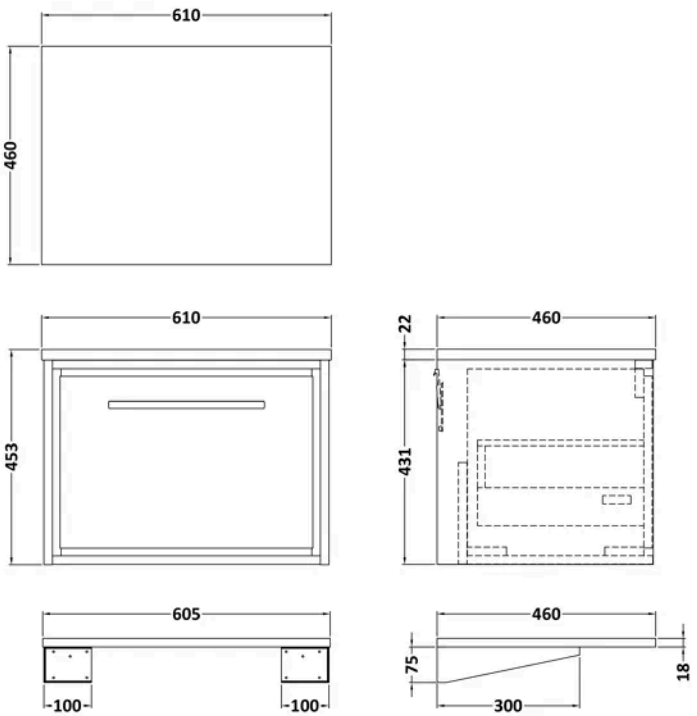

Product Dimensions

Product	453 x 605 x 460mm (H x W x D)
Packaged	470 x 620 x 480mm (H x W x D)
Nett Weight	24.7 kg
Packaged Weight	25.2 kg

Product Details

Country of Origin	China
Product Material	Mfc Smooth Matt
Colour/Finish	Pebble Grey
Mount Type	Wall Hung
Style	Contemporary
Handle Type	D Shape
Fixings Included	Yes
Construction Method	Cam & Wood Dowel
Construction Type	Rigid
Drawer Type	80mm High Metal S/C Inc Gallery
Fascia Finish	Mfc Smooth Matt
Fsc Certified	Yes
Handles Included	Yes
Material Thickness	18 mm
No. Doors	1
No. Drawers	1
No. Shelves	1
Number Of Shelves	1
Waste Shroud	Yes

© ROXOR Group

Sales Code: 154048SB **Barcode:** 5056462654942 **Brand:** nuie **Description:** Dark Grey Shelf Support Brackets



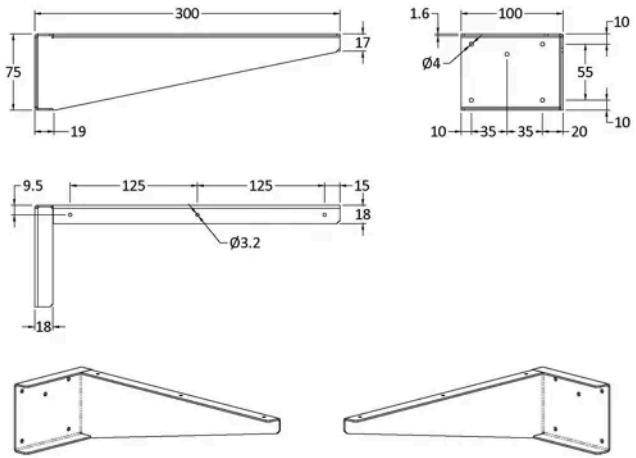

Product Dimensions

Product	300 x 100 x 50mm (H x W x D)
Packaged	90 x 130 x 330mm (H x W x D)
Nett Weight	0.72 kg
Packaged Weight	0.72 kg

Product Details

Country of Origin	China
Product Material	Stainless Steel
Colour/Finish	Dark Grey
Style	Contemporary

© ROXOR Group

Sales Code: LCM6046 **Barcode:** 5056817724320 **Brand:** nuie **Description:** Laminate Worktop 605x460x22mm

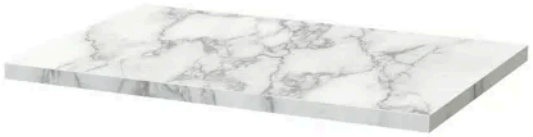

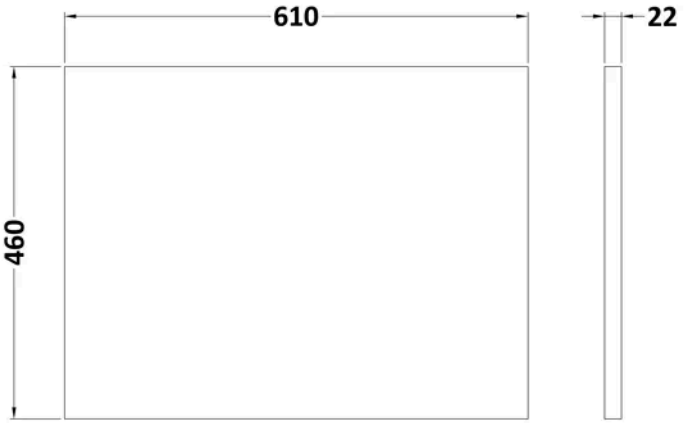

Product Dimensions

Product	22 x 605 x 460mm (H x W x D)
Packaged	20 x 520 x 610mm (H x W x D)
Nett Weight	2 kg
Packaged Weight	2 kg

Packaging Details

Box Qty	1

Product Details

Country of Origin	United Kingdom
Product Material	Mfc Laminated
Colour/Finish	Carrera Marble
Style	Contemporary

© ROXOR Group

Sales Code: MWD3260 **Barcode:** 5056678423684 **Brand:** Hudson Reed **Description:** 605 x 460mm Pebble Grey MFC Matt Furniture Worktop



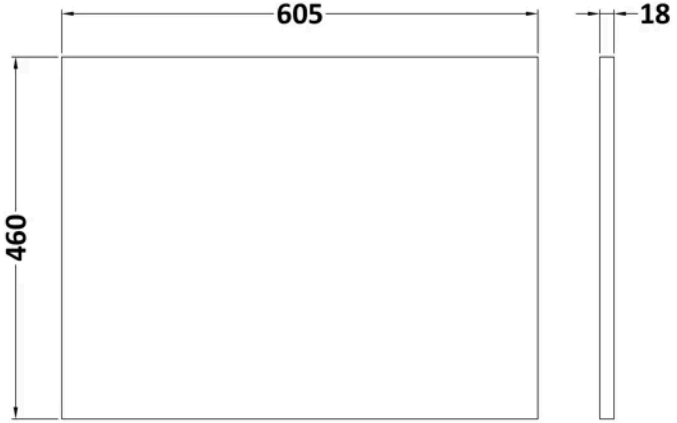

Product Dimensions

Product	18 x 605 x 460mm (H x W x D)
Packaged	20 x 610 x 465mm (H x W x D)
Nett Weight	2.7 kg
Packaged Weight	3 kg

Packaging Details

Box Qty	1

Product Details

Country of Origin	United Kingdom
Product Material	Mfc Smooth Matt
Colour/Finish	Pebble Grey
Style	Contemporary
Material Thickness	18 mm

© ROXOR Group

Sales Code: NFF3222 **Barcode:** 5056678423950 **Brand:** nuie **Description:** nuie Lille 600mm Pebble Grey 1 Drawer Wall Hung Vanity Unit



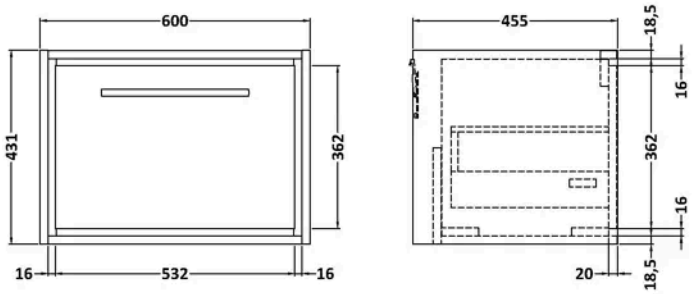

Product Dimensions

Product	431 x 600 x 455mm (H x W x D)
Packaged	470 x 632 x 480mm (H x W x D)
Nett Weight	22.5 kg
Packaged Weight	23 kg

Packaging Details

Box Qty	1
Label Colour	White
Label Qty	2.0000

Product Details

Country of Origin	China
Product Material	Mfc Smooth Matt
Colour/Finish	Pebble Grey
Mount Type	Wall Hung
Style	Contemporary
Handle Type	D Shape
Fixings Included	Yes
Construction Method	Cam & Wood Dowel
Construction Type	Rigid
Drawer Type	80mm High Metal S/C Inc Gallery
Fascia Finish	Mfc Smooth Matt
Fsc Certified	Yes
Handles Included	Yes
Material Thickness	18 mm
No. Drawers	1
Waste Shroud	Yes

© ROXOR Group