Sales Code: LIL3135P **Barcode:** 5056817719142 **Brand:** nuie **Description:** nuie Lille Fern Green 800mm 2 Drawer Floor Standing Vanity Unit With 1 Tap Hole Stone Basin



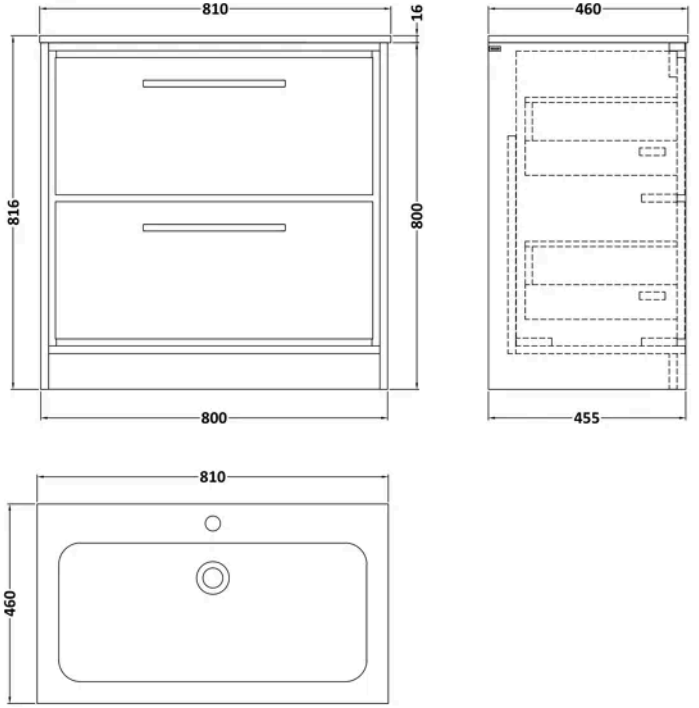

Product Dimensions

Product	867 x 830 x 471mm (H x W x D)
Packaged	840 x 820 x 480mm (H x W x D)
Nett Weight	68.5 kg
Packaged Weight	68.5 kg

Product Details

Country of Origin	China
Product Material	Mfc Smooth Matt,Stone
Colour/Finish	Fern Green
Mount Type	Floor
Style	Contemporary
Handle Type	D Shape
Fixings Included	Yes
Construction Method	Cam & Wood Dowel
Construction Type	Rigid
Drawer Type	80mm High Metal S/C Inc Gallery
Fascia Finish	Mfc Smooth Matt
Fsc Certified	Yes
Handles Included	Yes
Inner Bowl Depth	295 mm
Inner Bowl Height	134 mm
Inner Bowl Width	680 mm
Leg Set Included	No
Material Thickness	18 mm
No. Doors	2
No. Drawers	2
No. Of Tapholes	1
Number Of Bowls	1
Overflow Cover Included	Yes
Overflow Included	Yes
Tap Included	No
Waste Included	No
Waste Shroud	No

© ROXOR Group

Sales Code: NFF3135 **Barcode:** 5056678423967 **Brand:** nuie **Description:** nuie Lille 800mm Fern Green 2 Drawer Floor Standing Vanity Unit



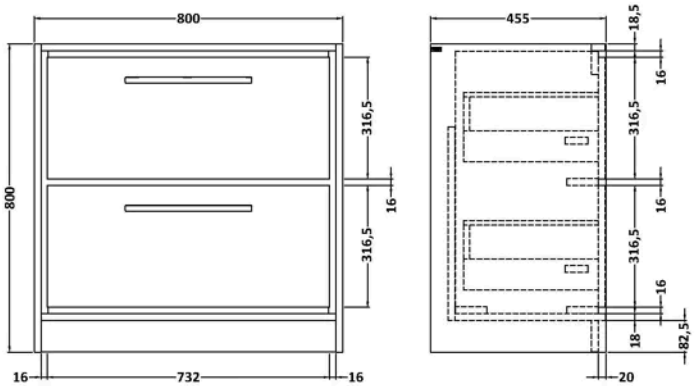

Product Dimensions

Product	800 x 600 x 455mm (H x W x D)
Packaged	840 x 832 x 480mm (H x W x D)
Nett Weight	51.5 kg
Packaged Weight	52 kg

Packaging Details

Box Qty	1
Label Colour	White
Label Qty	2.0000

Product Details

Country of Origin	China
Product Material	Mfc Smooth Matt
Colour/Finish	Fern Green
Mount Type	Wall Hung
Style	Contemporary
Handle Type	D Shape
Fixings Included	Yes
Construction Method	Cam & Wood Dowel
Construction Type	Rigid
Drawer Type	80mm High Metal S/C Inc Gallery
Fascia Finish	Mfc Smooth Matt
Fsc Certified	Yes
Handles Included	Yes
Material Thickness	18 mm
No. Drawers	2
Waste Shroud	No

© ROXOR Group

Sales Code: SBM105 **Barcode:** 5056678424346 **Brand:** nuie **Description:** 800mm 1 Tap Hole White Stone Furniture Basin



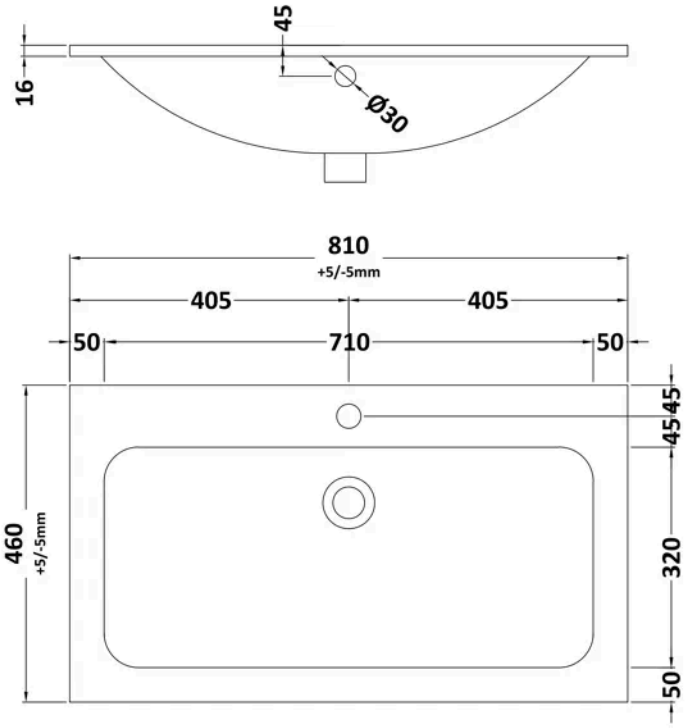

Product Dimensions

Product	810 x 460mm (W x D)
Packaged	200 x 875 x 530mm (H x W x D)
Nett Weight	16 kg
Packaged Weight	16.5 kg

Packaging Details

Box Qty	1

Product Details

Country of Origin	China
Product Material	Stone
Colour/Finish	Matt White
Style	Contemporary
Bottle Trap Included	No
Ce Certified	Yes
Inner Bowl Depth	320 mm
Inner Bowl Height	128 mm
Inner Bowl Width	710 mm
No. Of Tapholes	1
Number Of Bowls	1
Overflow Cover Included	Yes
Overflow Included	Yes
Tap Included	No
Waste Included	No

© ROXOR Group