Sales Code: LIL3126C **Barcode:** 5056678423271 **Brand:** nuie **Description:** nuie Lille Fern Green 800mm 2 Drawer Wall Hung Vanity Unit With 1 Tap Hole Basin



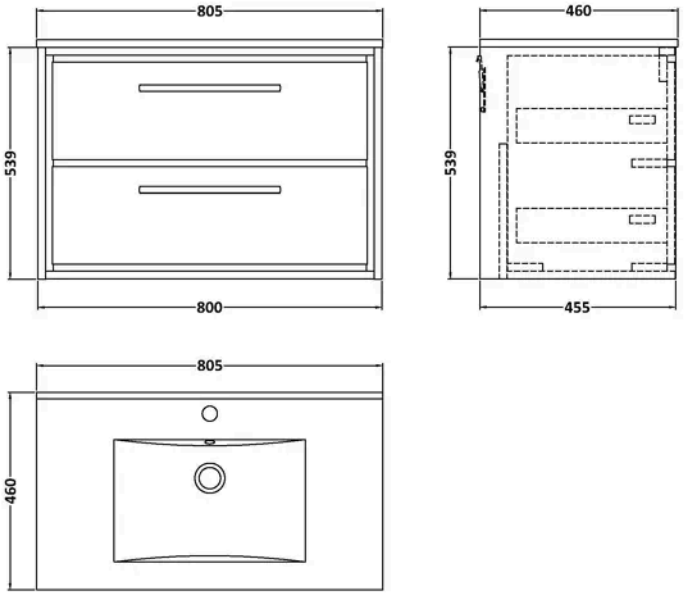

Product Dimensions

Product	539 x 805 x 460mm (H x W x D)
Packaged	550 x 550 x 550mm (H x W x D)
Nett Weight	55.5 kg
Packaged Weight	56 kg

Packaging Details

Box Qty	2

Product Details

Country of Origin	China
Product Material	Mfc Smooth Matt,Vitreous China
Colour/Finish	Fern Green
Mount Type	Wall Hung
Style	Contemporary
Handle Type	D Shape
Fixings Included	Yes
Construction Method	Cam & Wood Dowel
Construction Type	Rigid
Drawer Type	80mm High Metal S/C Inc Gallery
Fascia Finish	Mfc Smooth Matt
Fsc Certified	Yes
Handles Included	Yes
Inner Bowl Depth	280 mm
Inner Bowl Height	120 mm
Inner Bowl Width	445 mm
Leg Set Included	No
Material Thickness	18 mm
No. Doors	2
No. Drawers	2
No. Of Tapholes	1
Number Of Bowls	1
Overflow Cover Included	Yes
Overflow Included	Yes
Tap Included	No
Waste Included	No
Waste Shroud	Yes

© ROXOR Group

Sales Code: BAST9080E **Barcode:** 5056678482742 **Brand:** Hudson Reed **Description:** 1 Tap Hole 800mm Ceramic Minimalist Rectangular Basin



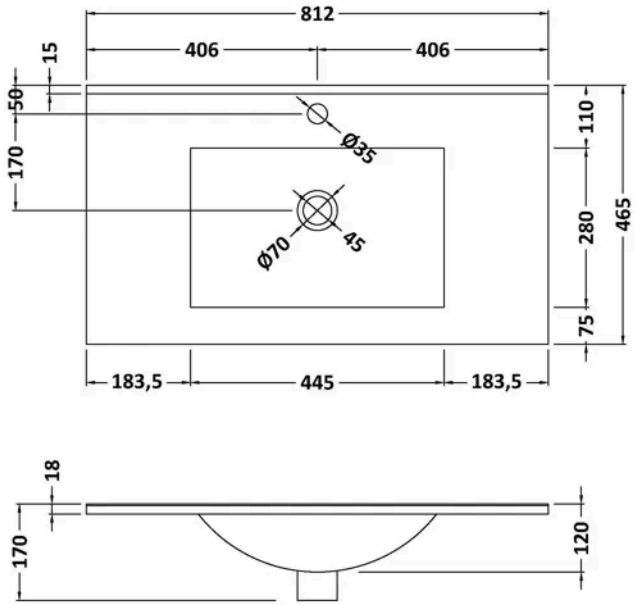

Product Dimensions

Product	170 x 812 x 465mm (H x W x D)
Packaged	195 x 825 x 480mm (H x W x D)
Nett Weight	17 kg
Packaged Weight	17.5 kg

Packaging Details

Box Qty	1
Label Size (mm)	100 x 50
Label Colour	White
Label Qty	2.0000

Product Details

Country of Origin	China
Product Material	Vitreous China
Colour/Finish	White
Style	Contemporary
Fixings Included	No
Bottle Trap Included	No
Ce Certified	Yes
Inner Bowl Height	120 mm
No. Of Tapholes	1
Number Of Bowls	1
Overflow Cover Included	No
Overflow Included	Yes
Tap Included	No
Waste Included	No
Waste Size Required	1.5" (70mm flange)

© ROXOR Group

Sales Code: NFF3126 **Barcode:** 5056678423882 **Brand:** nuie **Description:** nuie Lille 800mm Fern Green 2 Drawer Wall Hung Vanity Unit



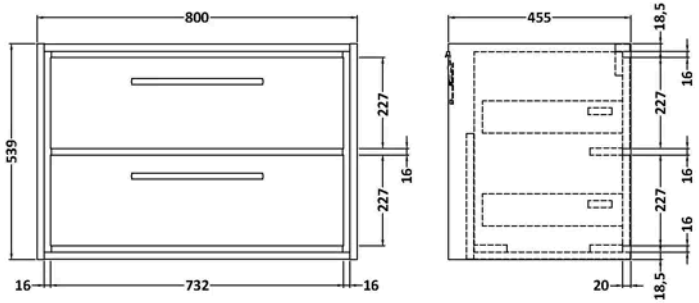

Product Dimensions

Product	539 x 800 x 455mm (H x W x D)
Packaged	577 x 832 x 480mm (H x W x D)
Nett Weight	39 kg
Packaged Weight	39.5 kg

Packaging Details

Box Qty	1
Label Colour	White
Label Qty	2.0000

Product Details

Country of Origin	China
Product Material	Mfc Smooth Matt
Colour/Finish	Fern Green
Mount Type	Wall Hung
Style	Contemporary
Handle Type	D Shape
Fixings Included	Yes
Construction Method	Cam & Wood Dowel
Construction Type	Rigid
Drawer Type	80mm High Metal S/C Inc Gallery
Fascia Finish	Mfc Smooth Matt
Fsc Certified	Yes
Handles Included	Yes
Material Thickness	18 mm
No. Drawers	2
Waste Shroud	Yes

© ROXOR Group