Sales Code: LIL3124Q **Barcode:** 5056817718909 **Brand:** nuie **Description:** nuie Lille Fern Green 600mm 2 Drawer Wall Hung Vanity Unit With 1 Tap Hole Stone Basin



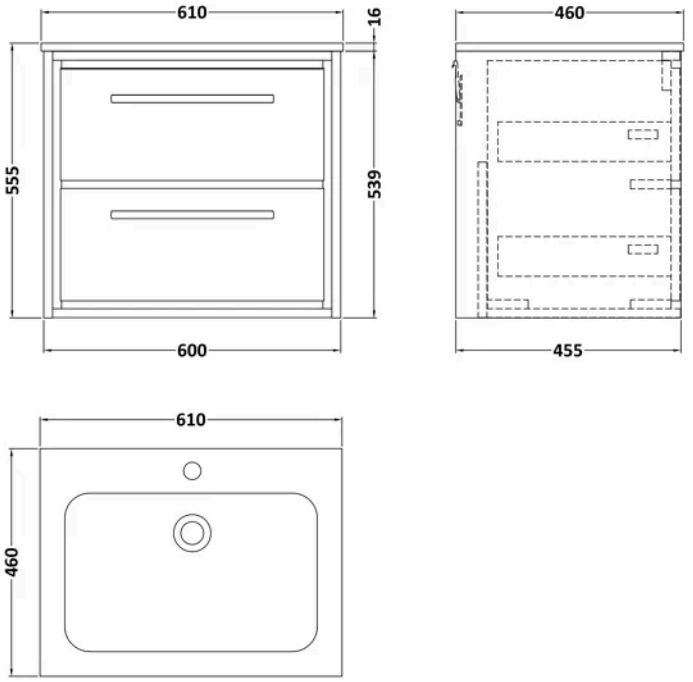

Product Dimensions

Product	605 x 630 x 471mm (H x W x D)
Packaged	577 x 620 x 480mm (H x W x D)
Nett Weight	43.5 kg
Packaged Weight	43.5 kg

Product Details

Country of Origin	China
Product Material	Mfc Smooth Matt,Stone
Colour/Finish	Fern Green
Mount Type	Wall Hung
Style	Contemporary
Handle Type	D Shape
Fixings Included	Yes
Construction Method	Cam & Wood Dowel
Construction Type	Rigid
Drawer Type	80mm High Metal S/C Inc Gallery
Fascia Finish	Mfc Smooth Matt
Fsc Certified	Yes
Handles Included	Yes
Inner Bowl Depth	300 mm
Inner Bowl Height	135 mm
Inner Bowl Width	480 mm
Leg Set Included	No
Material Thickness	18 mm
No. Doors	2
No. Drawers	2
No. Of Tapholes	1
Number Of Bowls	1
Overflow Cover Included	Yes
Overflow Included	Yes
Tap Included	No
Waste Included	No
Waste Shroud	Yes

© ROXOR Group

Sales Code: NFF3124 **Barcode:** 5056678423929 **Brand:** nuie **Description:** nuie Lille 600mm Fern Green 2 Drawer Wall Hung Vanity Unit



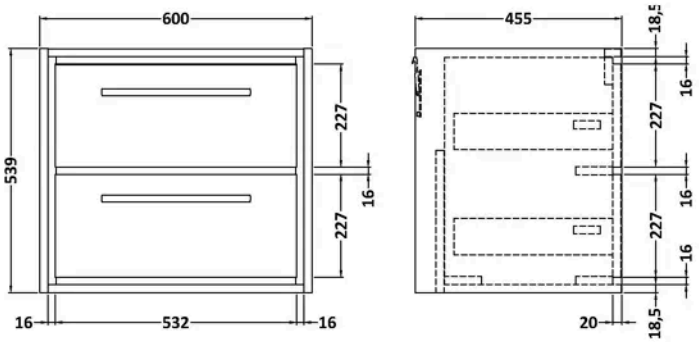

Product Dimensions

Product	539 x 600 x 455mm (H x W x D)
Packaged	577 x 632 x 480mm (H x W x D)
Nett Weight	29 kg
Packaged Weight	29.5 kg

Packaging Details

Box Qty	1
Label Colour	White
Label Qty	2.0000

Product Details

Country of Origin	China
Product Material	Mfc Smooth Matt
Colour/Finish	Fern Green
Mount Type	Wall Hung
Style	Contemporary
Handle Type	D Shape
Fixings Included	Yes
Construction Method	Cam & Wood Dowel
Construction Type	Rigid
Drawer Type	80mm High Metal S/C Inc Gallery
Fascia Finish	Mfc Smooth Matt
Fsc Certified	Yes
Handles Included	Yes
Material Thickness	18 mm
No. Drawers	2
Waste Shroud	Yes

© ROXOR Group

Sales Code: SBM903 **Barcode:** 5056678424353 **Brand:** nuie **Description:** 600mm 1 Tap Hole Carrera Marble Stone Furniture Basin



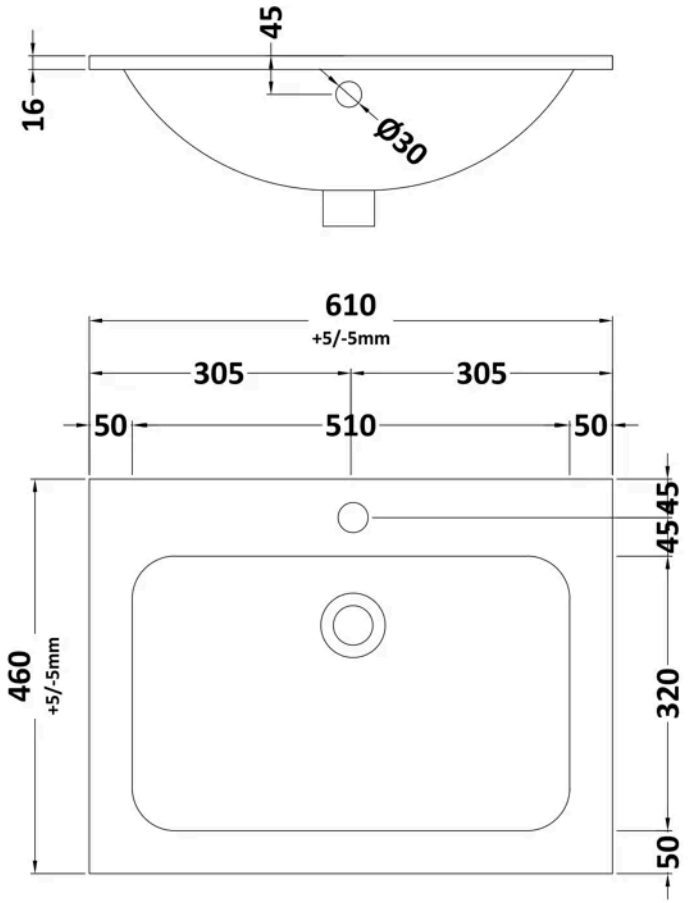

Product Dimensions

Product	610 x 460mm (W x D)
Packaged	200 x 675 x 530mm (H x W x D)
Nett Weight	13.5 kg
Packaged Weight	14 kg

Packaging Details

Box Qty	1

Product Details

Country of Origin	China
Product Material	Stone
Colour/Finish	Carrera Marble
Style	Contemporary
Bottle Trap Included	No
Ce Certified	Yes
Inner Bowl Depth	320 mm
Inner Bowl Height	128 mm
Inner Bowl Width	510 mm
No. Of Tapholes	1
Number Of Bowls	1
Overflow Cover Included	Yes
Overflow Included	Yes
Tap Included	No
Waste Included	No

© ROXOR Group