Sales Code: LIL3033WS1

Barcode: 5056678488447

Brand: nuie

Description: nuie Lille Bleached Oak 600mm 2 Drawer Floor Standing Vanity Unit With Square Basin With Marble Worktop



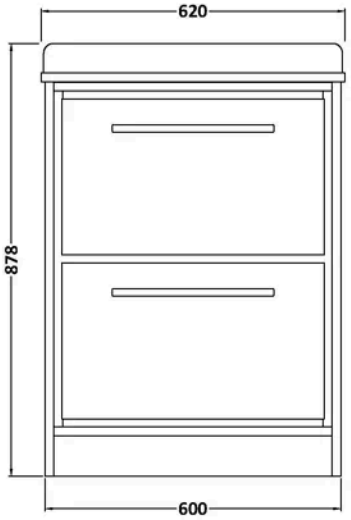

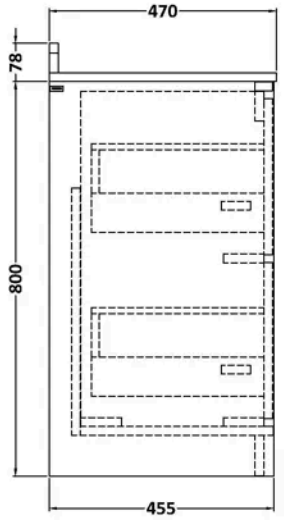

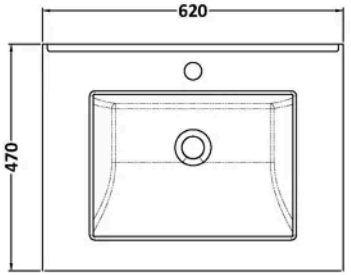

Product Dimensions

Product	878 x 620 x 470mm (H x W x D)
Packaged	800 x 600 x 455mm (H x W x D)
Nett Weight	54.5 kg
Packaged Weight	55 kg

Packaging Details

Box Qty	2

Product Details

Country of Origin	China
Product Material	Mfc Textured Woodgrain,Vitreous China
Colour/Finish	Bleached Oak
Mount Type	Floor
Style	Contemporary
Handle Type	D Shape
Fixings Included	Yes
Construction Method	Cam & Wood Dowel
Construction Type	Rigid
Drawer Type	80mm High Metal S/C Inc Gallery
Fascia Finish	Mfc Textured Woodgrain
Fsc Certified	Yes
Handles Included	Yes
Inner Bowl Depth	272 mm
Inner Bowl Height	160 mm
Leg Set Included	No
Material Thickness	18 mm
No. Doors	2
No. Drawers	2
No. Of Tapholes	1
Number Of Bowls	1
Overflow Cover Included	Yes
Overflow Included	Yes
Tap Included	No
Waste Included	No
Waste Shroud	No

© ROXOR Group

Sales Code: LSM222 **Barcode:** 5056462655864 **Brand:** Old London **Description:** 1 Tap Hole 600mm White Single Square Bowl Marble Worktop Basin



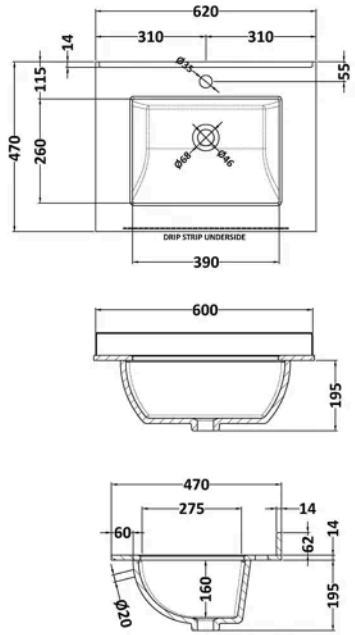

Product Dimensions

Product	209 x 620 x 470mm (H x W x D)
Packaged	250 x 700 x 580mm (H x W x D)
Nett Weight	16.5 kg
Packaged Weight	17 kg

Packaging Details

Box Qty	1
Label Size (mm)	50 x 100
Label Colour	White
Label Qty	2.0000

Product Details

Country of Origin	China
Product Material	Vitreous China
Colour/Finish	White
Style	Traditional
Bottle Trap Included	No
Ce Certified	Yes
Inner Bowl Depth	275 mm
Inner Bowl Height	160 mm
Inner Bowl Width	390 mm
No. Of Tapholes	1
Number Of Bowls	1
Overflow Cover Included	No
Overflow Included	Yes
Tap Included	No
Waste Included	No

© ROXOR Group

Sales Code: NFF3033 **Barcode:** 5056678485668 **Brand:** nuie **Description:** nuie Lille 600mm Bleached Oak 2 Drawer Floor Standing Vanity Unit



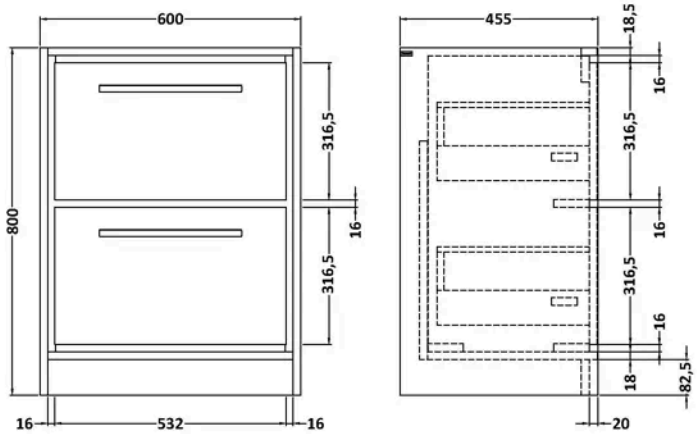

Product Dimensions

Product	800 x 800 x 455mm (H x W x D)
Packaged	840 x 632 x 480mm (H x W x D)
Nett Weight	38.5 kg
Packaged Weight	39 kg

Packaging Details

Box Qty	1
Label Colour	White
Label Qty	2.0000

Product Details

Country of Origin	China
Product Material	Mfc Textured Woodgrain
Colour/Finish	Bleached Oak
Mount Type	Wall Hung
Style	Contemporary
Handle Type	D Shape
Fixings Included	Yes
Construction Method	Cam & Wood Dowel
Construction Type	Rigid
Drawer Type	80mm High Metal S/C Inc Gallery
Fascia Finish	Mfc Textured Woodgrain
Fsc Certified	Yes
Handles Included	Yes
Material Thickness	18 mm
No. Drawers	2
Waste Shroud	No

© ROXOR Group