Sales Code: LIL3026GMT **Barcode:** 5056678488027 **Brand:** nuie **Description:** nuie Lille 800mm Bleached Oak 2 Drawer Wall Hung Vanity With Grey Marble Worktop



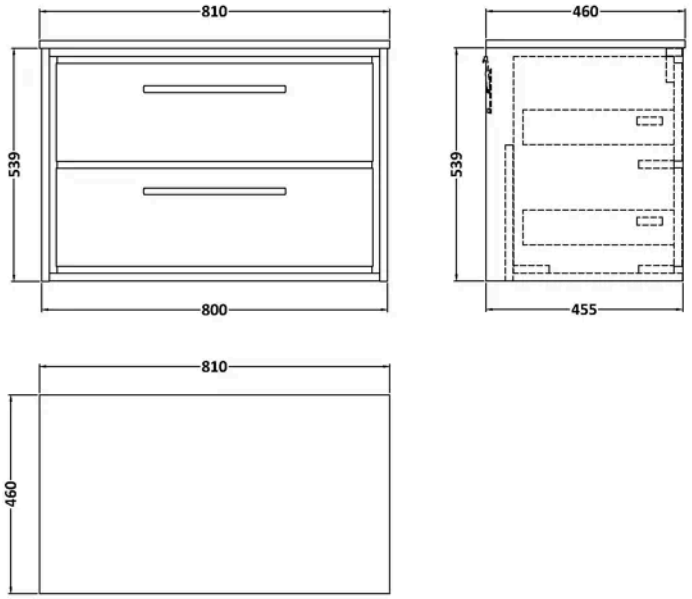

Product Dimensions

Product	539 x 810 x 460mm (H x W x D)
Packaged	540 x 800 x 455mm (H x W x D)
Nett Weight	56 kg
Packaged Weight	56.5 kg

Packaging Details

Box Qty	2

Product Details

Country of Origin	China
Product Material	Mfc Textured Woodgrain,Natural Marble
Colour/Finish	Bleached Oak
Mount Type	Wall Hung
Style	Contemporary
Handle Type	D Shape
Fixings Included	Yes
Construction Method	Cam & Wood Dowel
Construction Type	Rigid
Drawer Type	80mm High Metal S/C Inc Gallery
Fascia Finish	Mfc Textured Woodgrain
Fsc Certified	Yes
Handles Included	Yes
Material Thickness	18 mm
No. Doors	2
No. Drawers	2
Waste Shroud	Yes

© ROXOR Group

Sales Code: LOM38046 **Barcode:** 5056678477229 **Brand:** nuie **Description:** Hudson Reed 810x460mm Grey Marble Worktop



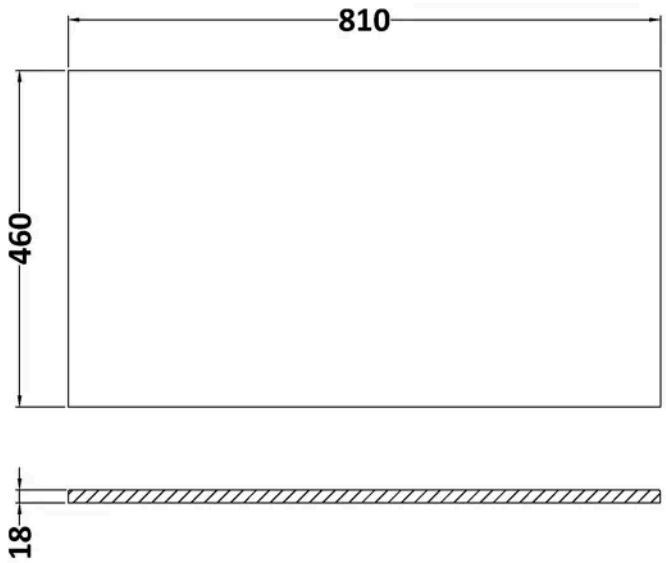

Product Dimensions

Product	18 x 810 x 460mm (H x W x D)
Packaged	35 x 850 x 500mm (H x W x D)
Nett Weight	17.5 kg
Packaged Weight	18 kg

Packaging Details

Box Qty	1
Label Size (mm)	50 x 100
Label Colour	White
Label Qty	1.0000

Product Details

Country of Origin	China
Product Material	Natural Marble
Colour/Finish	Grey
Style	Contemporary
Fixings Included	No
Fsc Certified	Yes
Material Thickness	18 mm

© ROXOR Group

Sales Code: NFF3026 **Barcode:** 5056678485750 **Brand:** nuie **Description:** nuie Lille 800mm Bleached Oak 2 Drawer Wall Hung Vanity Unit



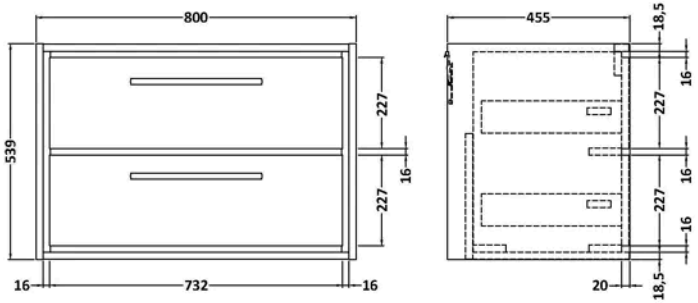

Product Dimensions

Product	539 x 800 x 455mm (H x W x D)
Packaged	577 x 832 x 480mm (H x W x D)
Nett Weight	39 kg
Packaged Weight	39.5 kg

Packaging Details

Box Qty	1
Label Colour	White
Label Qty	2.0000

Product Details

Country of Origin	China
Product Material	Mfc Textured Woodgrain
Colour/Finish	Bleached Oak
Mount Type	Wall Hung
Style	Contemporary
Handle Type	D Shape
Fixings Included	Yes
Construction Method	Cam & Wood Dowel
Construction Type	Rigid
Drawer Type	80mm High Metal S/C Inc Gallery
Fascia Finish	Mfc Textured Woodgrain
Fsc Certified	Yes
Handles Included	Yes
Material Thickness	18 mm
No. Drawers	2
Waste Shroud	Yes

© ROXOR Group