**Sales Code:** LIL3025E **Barcode:** 5056678486245 **Brand:** nuie **Description:** nuie Lille Bleached Oak 800mm 1 Drawer Wall Hung Vanity Unit With 1 Tap Hole Basin



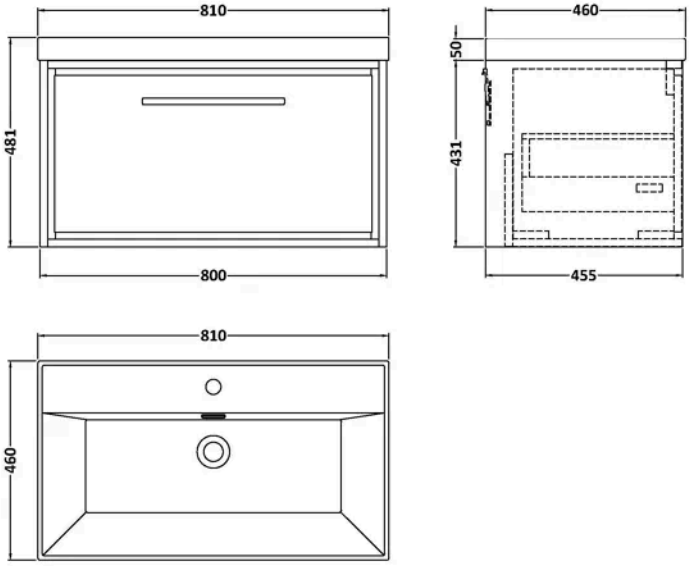


## Product Dimensions

| | |
|---|---|
| Product | 481 x 810 x 460mm (H x W x D) |
| Packaged | 431 x 800 x 455mm (H x W x D) |
| Nett Weight | 47 kg |
| Packaged Weight | 47.5 kg |

## Packaging Details

| | |
|---|---|
| Box Qty | 2 |

## Product Details

| | |
|---|---|
| Country of Origin | China |
| Product Material | Mfc Textured Woodgrain,Vitreous China |
| Colour/Finish | Bleached Oak |
| Mount Type | Wall Hung |
| Style | Contemporary |
| Handle Type | D Shape |
| Fixings Included | Yes |
| Construction Method | Cam & Wood Dowel |
| Construction Type | Rigid |
| Drawer Type | 80mm High Metal S/C Inc Gallery |
| Fascia Finish | Mfc Textured Woodgrain |
| Fsc Certified | Yes |
| Handles Included | Yes |
| Inner Bowl Depth | 270 mm |
| Inner Bowl Height | 125 mm |
| Inner Bowl Width | 600 mm |
| Leg Set Included | No |
| Material Thickness | 18 mm |
| No. Doors | 1 |
| No. Drawers | 1 |
| No. Of Tapholes | 1 |
| Number Of Bowls | 1 |
| Overflow Cover Included | Yes |
| Overflow Included | Yes |
| Tap Included | No |
| Waste Included | No |
| Waste Shroud | Yes |

© ROXOR Group

**Sales Code:** NFF3025 **Barcode:** 5056678482629 **Brand:** nuie **Description:** nuie Lille 800mm Bleached Oak 1 Drawer Wall Hung Vanity Unit



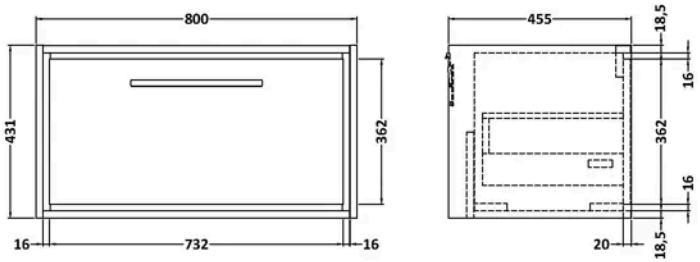


## Product Dimensions

| | |
|---|---|
| Product | 431 x 800 x 455mm (H x W x D) |
| Packaged | 470 x 832 x 480mm (H x W x D) |
| Nett Weight | 30 kg |
| Packaged Weight | 30.5 kg |

## Packaging Details

| | |
|---|---|
| Box Qty | 1 |
| Label Colour | White |
| Label Qty | 2.0000 |

## Product Details

| | |
|---|---|
| Country of Origin | China |
| Product Material | Mfc Textured Woodgrain |
| Colour/Finish | Bleached Oak |
| Mount Type | Wall Hung |
| Style | Contemporary |
| Handle Type | D Shape |
| Fixings Included | Yes |
| Construction Method | Cam & Wood Dowel |
| Construction Type | Rigid |
| Drawer Type | 80mm High Metal S/C Inc Gallery |
| Fascia Finish | Mfc Textured Woodgrain |
| Fsc Certified | Yes |
| Handles Included | Yes |
| Material Thickness | 18 mm |
| No. Drawers | 1 |
| Waste Shroud | Yes |

© ROXOR Group

**Sales Code:** NVM065 **Barcode:** 5056678484876 **Brand:** nuie **Description:** 1 Tap Hole 800mm Thin Edge Ceramic Basin



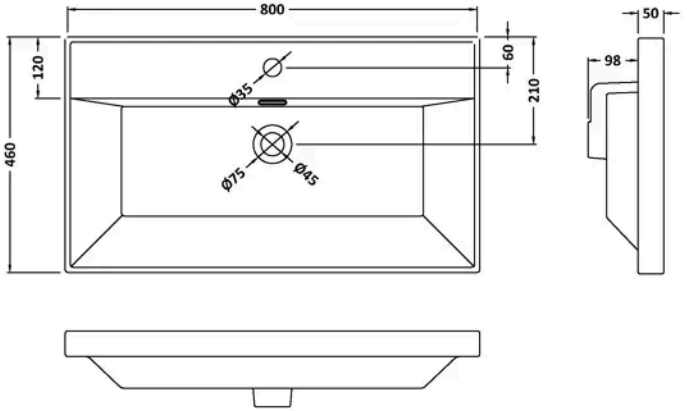


## Product Dimensions

| | |
|---|---|
| Product | 148 x 800 x 460mm (H x W x D) |
| Packaged | 170 x 825 x 480mm (H x W x D) |
| Nett Weight | 17.5 kg |
| Packaged Weight | 18 kg |

## Packaging Details

| | |
|---|---|
| Box Qty | 1 |
| Label Size (mm) | 100 x 50 |
| Label Colour | White |
| Label Qty | 2.0000 |

## Product Details

| | |
|---|---|
| Country of Origin | China |
| Product Material | Vitreous China |
| Colour/Finish | White |
| Style | Contemporary |
| Fixings Included | No |
| Bottle Trap Included | No |
| Ce Certified | Yes |
| Inner Bowl Depth | 270 mm |
| Inner Bowl Height | 125 mm |
| Inner Bowl Width | 600 mm |
| No. Of Tapholes | 1 |
| Number Of Bowls | 1 |
| Overflow Cover Included | No |
| Overflow Included | Yes |
| Tap Included | No |
| Waste Included | No |

© ROXOR Group