Sales Code: LIL3024CMT2 **Barcode:** 5056678488386 **Brand:** nuie **Description:** nuie Lille 610mm Bleached Oak 4 Drawer Wall Hung Vanity With Carrara Marble Worktop



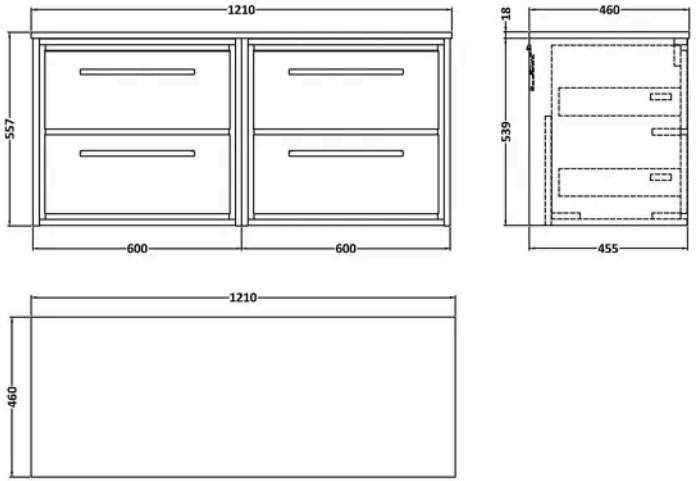

Product Dimensions

Product	557 x 610 x 460mm (H x W x D)
Packaged	540 x 1200 x 455mm (H x W x D)
Nett Weight	83 kg
Packaged Weight	83.5 kg

Packaging Details

Box Qty	3

Product Details

Country of Origin	China
Product Material	Mfc Textured Woodgrain,Natural Marble
Colour/Finish	Bleached Oak
Mount Type	Wall Hung
Style	Contemporary
Handle Type	D Shape
Fixings Included	Yes
Construction Method	Cam & Wood Dowel
Construction Type	Rigid
Drawer Type	80mm High Metal S/C Inc Gallery
Fascia Finish	Mfc Textured Woodgrain
Fsc Certified	Yes
Handles Included	Yes
Material Thickness	18 mm
No. Doors	4
No. Drawers	4
Waste Shroud	Yes

© ROXOR Group

Sales Code: LOM91246 **Barcode:** 5056678482384 **Brand:** nuie **Description:** Hudson Reed 1210x460mm Carrera Marble Worktop



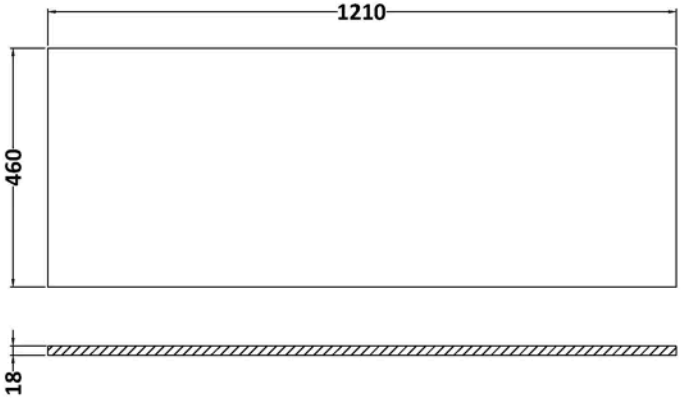

Product Dimensions

Product	18 x 1210 x 460mm (H x W x D)
Packaged	35 x 1250 x 500mm (H x W x D)
Nett Weight	25.5 kg
Packaged Weight	26 kg

Packaging Details

Box Qty	1
Label Size (mm)	50 x 100
Label Colour	White
Label Qty	1.0000

Product Details

Country of Origin	China
Product Material	Natural Marble
Colour/Finish	Carrera Marble
Style	Contemporary
Fixings Included	No
Fsc Certified	Yes
Material Thickness	18 mm

© ROXOR Group

Sales Code: NFF3024 **Barcode:** 5056678485729 **Brand:** nuie **Description:** nuie Lille 600mm Bleached Oak 2 Drawer Wall Hung Vanity Unit



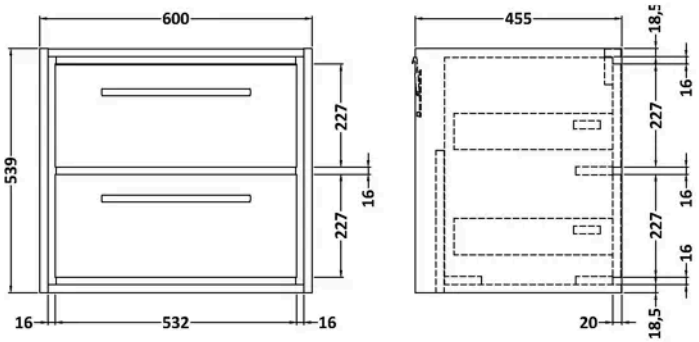

Product Dimensions

Product	539 x 600 x 455mm (H x W x D)
Packaged	577 x 632 x 480mm (H x W x D)
Nett Weight	29 kg
Packaged Weight	29.5 kg

Packaging Details

Box Qty	1
Label Colour	White
Label Qty	2.0000

Product Details

Country of Origin	China
Product Material	Mfc Textured Woodgrain
Colour/Finish	Bleached Oak
Mount Type	Wall Hung
Style	Contemporary
Handle Type	D Shape
Fixings Included	Yes
Construction Method	Cam & Wood Dowel
Construction Type	Rigid
Drawer Type	80mm High Metal S/C Inc Gallery
Fascia Finish	Mfc Textured Woodgrain
Fsc Certified	Yes
Handles Included	Yes
Material Thickness	18 mm
No. Drawers	2
Waste Shroud	Yes

© ROXOR Group