Sales Code: LIL3022WS2 **Barcode:** 5056678488683 **Brand:** nuie **Description:** nuie Lille 1200mm Bleached Oak 2 Drawer Wall Hung Vanity With Twin Marble Basin



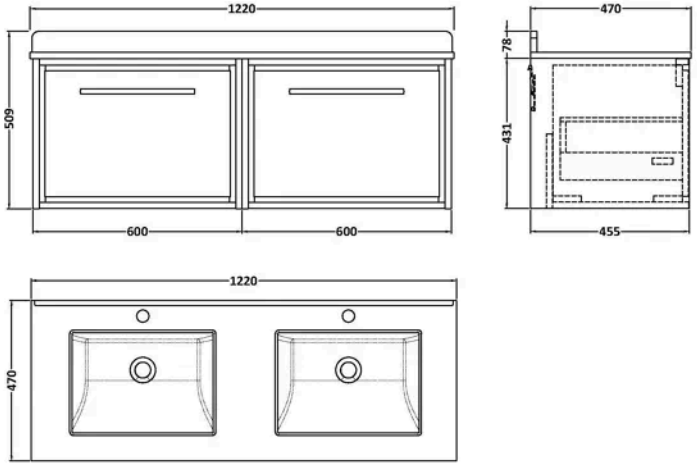

Product Dimensions

Product	509 x 1220 x 470mm (H x W x D)
Packaged	431 x 1200 x 455mm (H x W x D)
Nett Weight	75 kg
Packaged Weight	75.5 kg

Packaging Details

Box Qty	3

Product Details

Country of Origin	China
Product Material	Mfc Textured Woodgrain,Vitreous China
Colour/Finish	Bleached Oak
Mount Type	Wall Hung
Style	Contemporary
Handle Type	D Shape
Fixings Included	Yes
Construction Method	Cam & Wood Dowel
Construction Type	Rigid
Drawer Type	80mm High Metal S/C Inc Gallery
Fascia Finish	Mfc Textured Woodgrain
Fsc Certified	Yes
Handles Included	Yes
Inner Bowl Depth	272 mm
Inner Bowl Height	160 mm
Inner Bowl Width	358 mm
Leg Set Included	No
Material Thickness	18 mm
No. Doors	1
No. Drawers	1
No. Of Tapholes	2
Number Of Bowls	2
Overflow Cover Included	Yes
Overflow Included	Yes
Tap Included	No
Waste Included	No
Waste Shroud	Yes

© ROXOR Group

Sales Code: LSM234 **Barcode:** 5056462656045 **Brand:** Old London **Description:** 1 Tap Hole 1200mm White Double Bowl Marble Worktop Basin



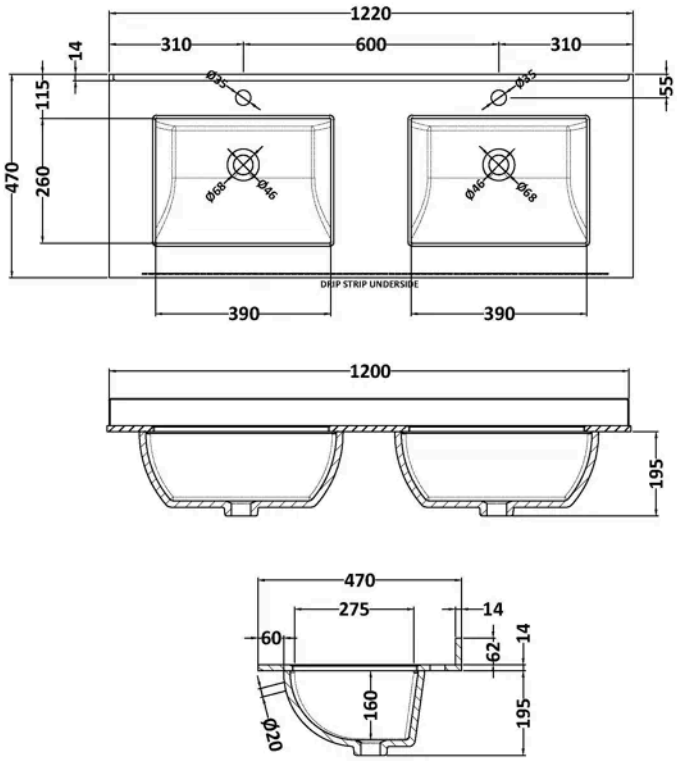

Product Dimensions

Product	209 x 1220 x 470mm (H x W x D)
Packaged	250 x 1320 x 580mm (H x W x D)
Nett Weight	30.5 kg
Packaged Weight	31 kg

Packaging Details

Box Qty	1
Label Size (mm)	50 x 100
Label Colour	White
Label Qty	2.0000

Product Details

Country of Origin	China
Product Material	Vitreous China
Colour/Finish	White
Style	Traditional
Bottle Trap Included	No
Ce Certified	Yes
Inner Bowl Depth	260 mm
Inner Bowl Height	160 mm
Inner Bowl Width	390 mm
No. Of Tapholes	1
Number Of Bowls	2
Overflow Cover Included	No
Overflow Included	Yes
Tap Included	No
Waste Included	No

© ROXOR Group

Sales Code: NFF3022 **Barcode:** 5056678482599 **Brand:** nuie **Description:** nuie Lille 600mm Bleached Oak 1 Drawer Wall Hung Vanity Unit



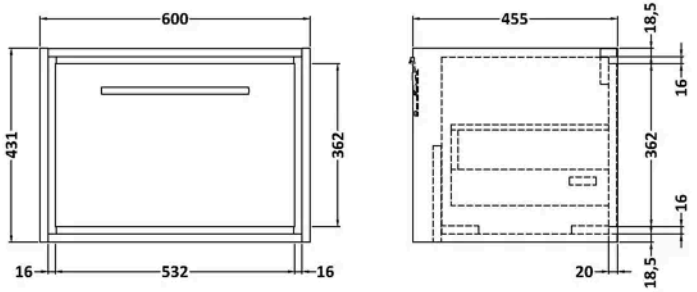

Product Dimensions

Product	431 x 600 x 455mm (H x W x D)
Packaged	470 x 632 x 480mm (H x W x D)
Nett Weight	22.5 kg
Packaged Weight	23 kg

Packaging Details

Box Qty	1
Label Colour	White
Label Qty	2.0000

Product Details

Country of Origin	China
Product Material	Mfc Textured Woodgrain
Colour/Finish	Bleached Oak
Mount Type	Wall Hung
Style	Contemporary
Handle Type	D Shape
Fixings Included	Yes
Construction Method	Cam & Wood Dowel
Construction Type	Rigid
Drawer Type	80mm High Metal S/C Inc Gallery
Fascia Finish	Mfc Textured Woodgrain
Fsc Certified	Yes
Handles Included	Yes
Material Thickness	18 mm
No. Drawers	1
Waste Shroud	Yes

© ROXOR Group