**Sales Code:** LIL2735WS1

**Barcode:** 5056678488546

**Brand:** nuie

**Description:** nuie Lille Antique Oak 800mm 2 Drawer Floor Standing Vanity Unit With Square Basin With Marble Worktop



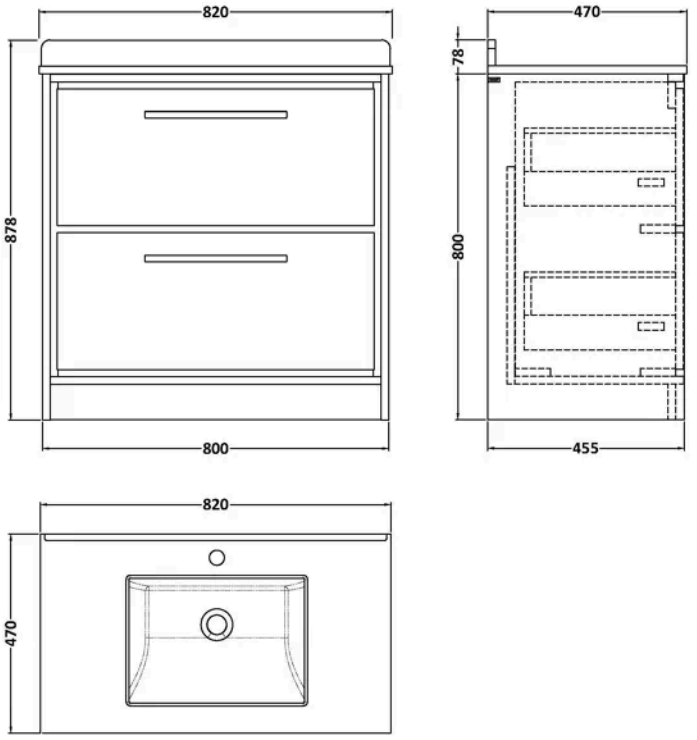


## Product Dimensions

| | |
|---|---|
| Product | 878 x 820 x 470mm (H x W x D) |
| Packaged | 800 x 800 x 455mm (H x W x D) |
| Nett Weight | 71.5 kg |
| Packaged Weight | 72 kg |

## Packaging Details

| | |
|---|---|
| Box Qty | 2 |

## Product Details

| | |
|---|---|
| Country of Origin | China |
| Product Material | Mfc Textured Woodgrain,Vitreous China |
| Colour/Finish | Antique Oak |
| Mount Type | Floor |
| Style | Contemporary |
| Handle Type | D Shape |
| Fixings Included | Yes |
| Construction Method | Cam & Wood Dowel |
| Construction Type | Rigid |
| Drawer Type | 80mm High Metal S/C Inc Gallery |
| Fascia Finish | Mfc Textured Woodgrain |
| Fsc Certified | Yes |
| Handles Included | Yes |
| Inner Bowl Depth | 272 mm |
| Inner Bowl Height | 160 mm |
| Leg Set Included | No |
| Material Thickness | 18 mm |
| No. Doors | 2 |
| No. Drawers | 2 |
| No. Of Tapholes | 1 |
| Number Of Bowls | 1 |
| Overflow Cover Included | Yes |
| Overflow Included | Yes |
| Tap Included | No |
| Waste Included | No |
| Waste Shroud | No |

© ROXOR Group

**Sales Code:** LSM228 **Barcode:** 5056462655925 **Brand:** Old London **Description:** 1 Tap Hole 800mm White Single Square Bowl Marble Worktop Basin



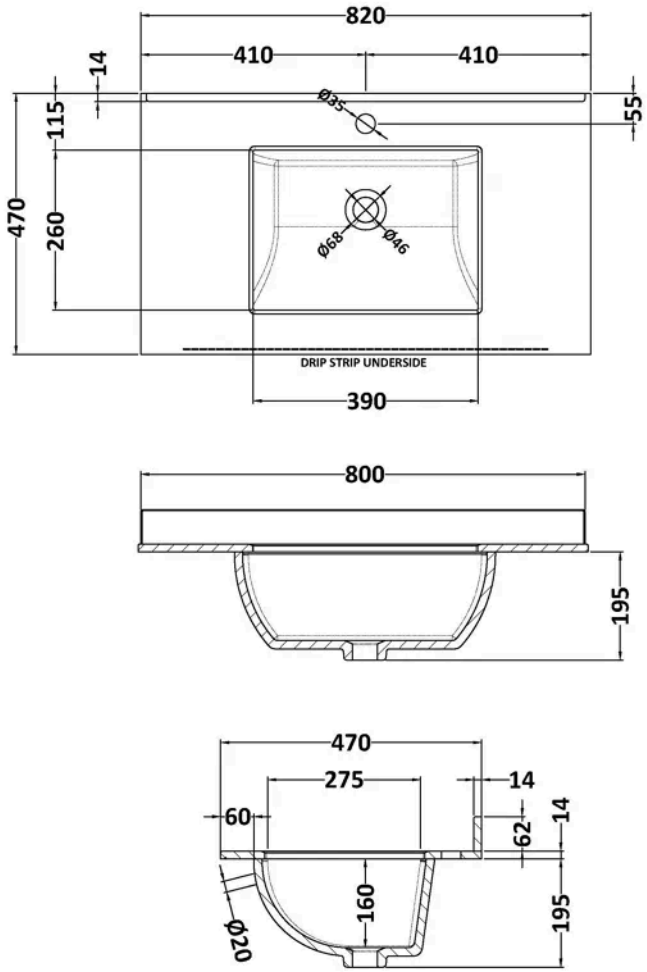


## Product Dimensions

| | |
|---|---|
| Product | 209 x 820 x 463mm (H x W x D) |
| Packaged | 250 x 900 x 580mm (H x W x D) |
| Nett Weight | 20.5 kg |
| Packaged Weight | 21 kg |

## Packaging Details

| | |
|---|---|
| Box Qty | 1 |
| Label Size (mm) | 50 x 100 |
| Label Colour | White |
| Label Qty | 2.0000 |

## Product Details

| | |
|---|---|
| Country of Origin | China |
| Product Material | Vitreous China |
| Colour/Finish | White |
| Style | Traditional |
| Bottle Trap Included | No |
| Ce Certified | Yes |
| Inner Bowl Depth | 275 mm |
| Inner Bowl Height | 160 mm |
| Inner Bowl Width | 390 mm |
| No. Of Tapholes | 1 |
| Number Of Bowls | 1 |
| Overflow Cover Included | No |
| Overflow Included | Yes |
| Tap Included | No |
| Waste Included | No |

© ROXOR Group

**Sales Code:** NFF2735 **Barcode:** 5056678485705 **Brand:** nuie **Description:** nuie Lille 800mm Antique Oak 2 Drawer Floor Standing Vanity Unit



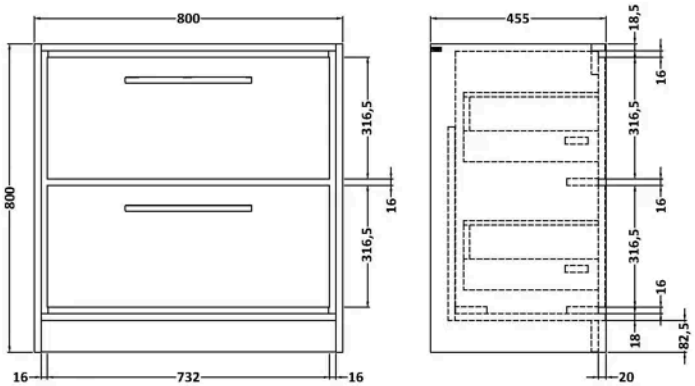


## Product Dimensions

| | |
|---|---|
| Product | 800 x 800 x 455mm (H x W x D) |
| Packaged | 840 x 832 x 480mm (H x W x D) |
| Nett Weight | 51.5 kg |
| Packaged Weight | 52 kg |

## Packaging Details

| | |
|---|---|
| Box Qty | 1 |
| Label Colour | White |
| Label Qty | 2.0000 |

## Product Details

| | |
|---|---|
| Country of Origin | China |
| Product Material | Mfc Textured Woodgrain |
| Colour/Finish | Antique Oak |
| Mount Type | Wall Hung |
| Style | Contemporary |
| Handle Type | D Shape |
| Fixings Included | Yes |
| Construction Method | Cam & Wood Dowel |
| Construction Type | Rigid |
| Drawer Type | 80mm High Metal S/C Inc Gallery |
| Fascia Finish | Mfc Textured Woodgrain |
| Fsc Certified | Yes |
| Handles Included | Yes |
| Material Thickness | 18 mm |
| No. Drawers | 2 |
| Waste Shroud | No |

© ROXOR Group