**Sales Code:** LIL2733WS2 **Barcode:** 5056678488638 **Brand:** nuie **Description:** nuie Lille 1200mm Antique Oak 4 Drawer Floor Standing Vanity With Twin Marble Basin



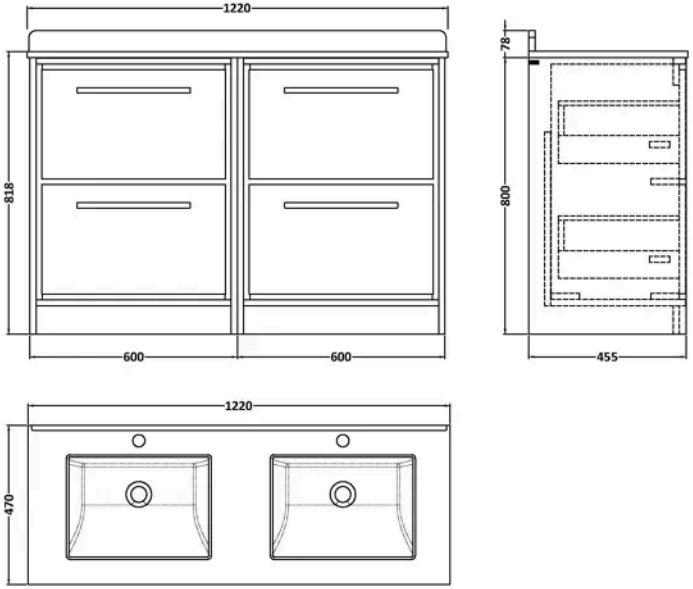


## Product Dimensions

| | |
|---|---|
| Product | 878 x 1220 x 470mm (H x W x D) |
| Packaged | 800 x 1200 x 455mm (H x W x D) |
| Nett Weight | 107 kg |
| Packaged Weight | 107.5 kg |

## Packaging Details

| | |
|---|---|
| Box Qty | 3 |

## Product Details

| | |
|---|---|
| Country of Origin | China |
| Product Material | Mfc Textured Woodgrain,Vitreous China |
| Colour/Finish | Antique Oak |
| Mount Type | Floor |
| Style | Contemporary |
| Handle Type | D Shape |
| Fixings Included | Yes |
| Construction Method | Cam & Wood Dowel |
| Construction Type | Rigid |
| Drawer Type | 80mm High Metal S/C Inc Gallery |
| Fascia Finish | Mfc Textured Woodgrain |
| Fsc Certified | Yes |
| Handles Included | Yes |
| Inner Bowl Depth | 272 mm |
| Inner Bowl Height | 160 mm |
| Inner Bowl Width | 358 mm |
| Leg Set Included | No |
| Material Thickness | 18 mm |
| No. Doors | 4 |
| No. Drawers | 4 |
| No. Of Tapholes | 2 |
| Number Of Bowls | 2 |
| Overflow Cover Included | Yes |
| Overflow Included | Yes |
| Tap Included | No |
| Waste Included | No |
| Waste Shroud | No |

© ROXOR Group

**Sales Code:** LSM234 **Barcode:** 5056462656045 **Brand:** Old London **Description:** 1 Tap Hole 1200mm White Double Bowl Marble Worktop Basin



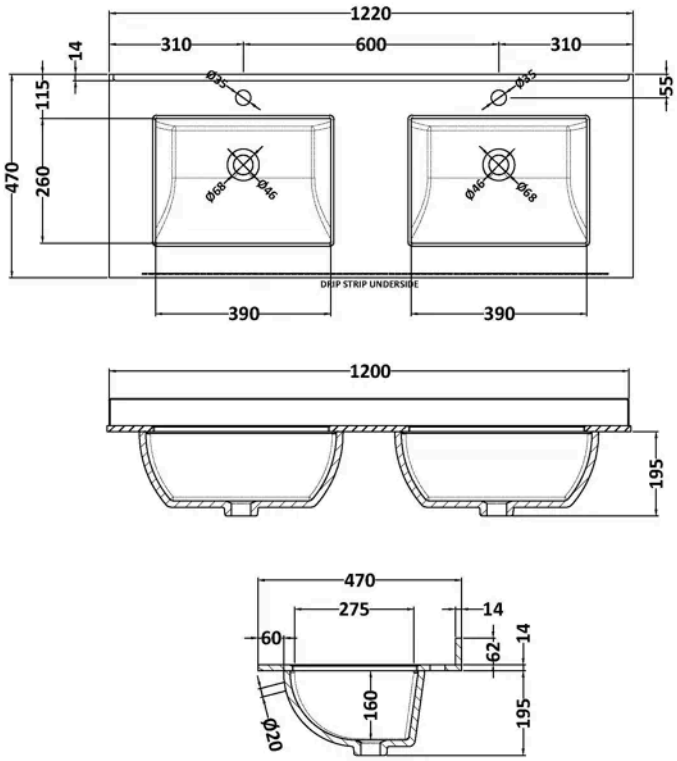


## Product Dimensions

| | |
|---|---|
| Product | 209 x 1220 x 470mm (H x W x D) |
| Packaged | 250 x 1320 x 580mm (H x W x D) |
| Nett Weight | 30.5 kg |
| Packaged Weight | 31 kg |

## Packaging Details

| | |
|---|---|
| Box Qty | 1 |
| Label Size (mm) | 50 x 100 |
| Label Colour | White |
| Label Qty | 2.0000 |

## Product Details

| | |
|---|---|
| Country of Origin | China |
| Product Material | Vitreous China |
| Colour/Finish | White |
| Style | Traditional |
| Bottle Trap Included | No |
| Ce Certified | Yes |
| Inner Bowl Depth | 260 mm |
| Inner Bowl Height | 160 mm |
| Inner Bowl Width | 390 mm |
| No. Of Tapholes | 1 |
| Number Of Bowls | 2 |
| Overflow Cover Included | No |
| Overflow Included | Yes |
| Tap Included | No |
| Waste Included | No |

© ROXOR Group

**Sales Code:** NFF2733 **Barcode:** 5056678485675 **Brand:** nuie **Description:** nuie Lille 600mm Antique Oak 2 Drawer Floor Standing Vanity Unit



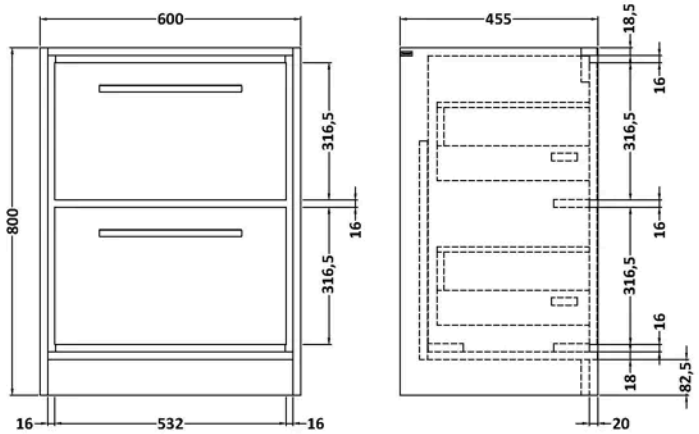


## Product Dimensions

| | |
|---|---|
| Product | 800 x 600 x 455mm (H x W x D) |
| Packaged | 840 x 632 x 480mm (H x W x D) |
| Nett Weight | 38.5 kg |
| Packaged Weight | 39 kg |

## Packaging Details

| | |
|---|---|
| Box Qty | 1 |
| Label Colour | White |
| Label Qty | 2.0000 |

## Product Details

| | |
|---|---|
| Country of Origin | China |
| Product Material | Mfc Textured Woodgrain |
| Colour/Finish | Antique Oak |
| Mount Type | Wall Hung |
| Style | Contemporary |
| Handle Type | D Shape |
| Fixings Included | Yes |
| Construction Method | Cam & Wood Dowel |
| Construction Type | Rigid |
| Drawer Type | 80mm High Metal S/C Inc Gallery |
| Fascia Finish | Mfc Textured Woodgrain |
| Fsc Certified | Yes |
| Handles Included | Yes |
| Material Thickness | 18 mm |
| No. Drawers | 2 |
| Waste Shroud | No |

© ROXOR Group