Sales Code: LIL2333K

Barcode: 5056817718282

Brand: nuie

Description: nuie Lille Coastal Grey 600mm Woodgrain 2 Drawer Floor Standing Vanity Unit With Fireclay Basin



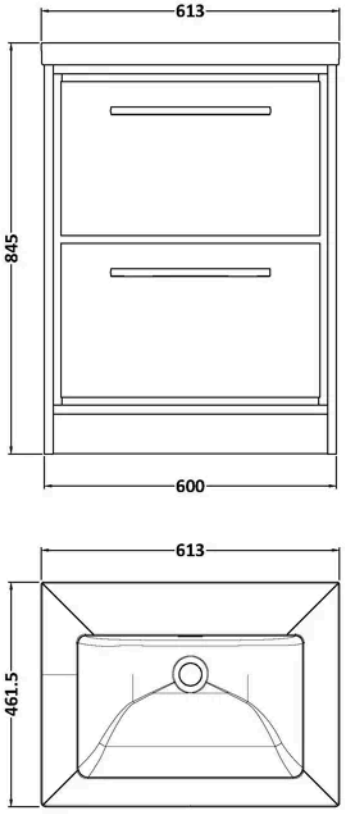

Product Dimensions

Product	845 x 613 x 462mm (H x W x D)
Packaged	840 x 620 x 480mm (H x W x D)
Nett Weight	55 kg
Packaged Weight	55.5 kg

Packaging Details

Box Qty	2

Product Details

Country of Origin	China
Product Material	Fireclay,Mfc Smooth Matt
Colour/Finish	Coastal Grey
Mount Type	Floor
Style	Contemporary
Handle Type	D Shape
Fixings Included	Yes
Construction Method	Cam & Wood Dowel
Construction Type	Rigid
Drawer Type	80mm High Metal S/C Inc Gallery
Fascia Finish	Mfc Smooth Matt
Fsc Certified	Yes
Handles Included	Yes
Inner Bowl Depth	300 mm
Inner Bowl Height	135 mm
Inner Bowl Width	480 mm
Leg Set Included	No
Material Thickness	18 mm
No. Doors	2
No. Drawers	2
No. Of Tapholes	No Tapholes
Number Of Bowls	1
Overflow Cover Included	Yes
Overflow Included	Yes
Tap Included	No
Waste Included	No
Waste Shroud	No

© ROXOR Group

Sales Code: CBM613 **Barcode:** 5056678485224 **Brand:** nuie **Description:** 0 Tap Hole 600mm Contemporary Fireclay Basin



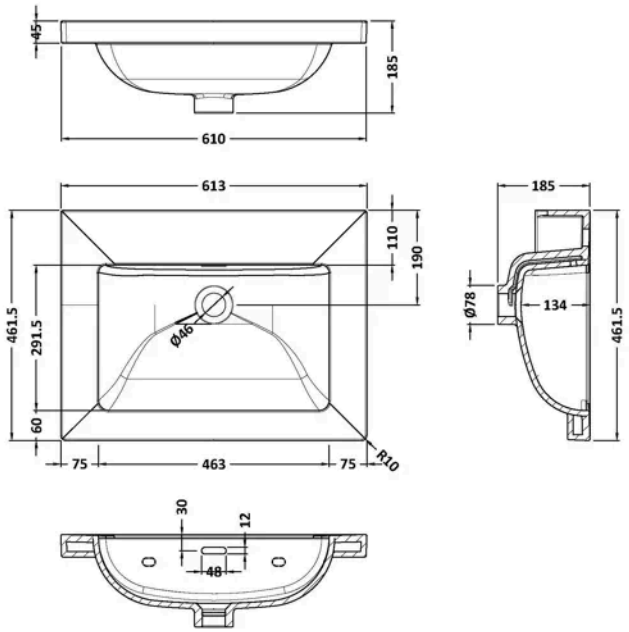

Product Dimensions

Product	45 x 610 x 460mm (H x W x D)
Packaged	490 x 650 x 220mm (H x W x D)
Nett Weight	17 kg
Packaged Weight	17 kg

Packaging Details

Box Qty	1
Label Size (mm)	100 x 50
Label Colour	White
Label Qty	2.0000

Product Details

Country of Origin	United Arab Emirates
Product Material	Fireclay
Colour/Finish	White
Style	Contemporary
Fixings Included	No
Bottle Trap Included	No
Ce Certified	Yes
Inner Bowl Depth	292 mm
Inner Bowl Height	135 mm
Inner Bowl Width	463 mm
No. Of Tapholes	No Tapholes
Number Of Bowls	1
Overflow Cover Included	No
Overflow Included	Yes
Tap Included	No
Waste Included	No

© ROXOR Group

Sales Code: NFF2333 **Barcode:** 5056678424063 **Brand:** nuie **Description:** nuie Lille 600mm Coastal Grey 2 Drawer Floor Standing Vanity Unit



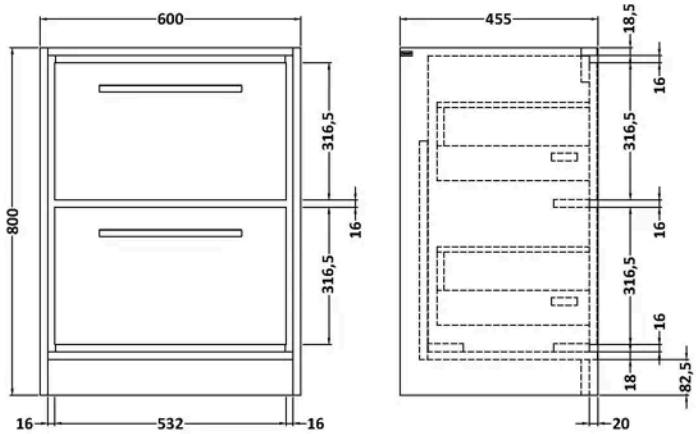

Product Dimensions

Product	800 x 600 x 455mm (H x W x D)
Packaged	840 x 632 x 480mm (H x W x D)
Nett Weight	38.5 kg
Packaged Weight	39 kg

Packaging Details

Box Qty	1
Label Colour	White
Label Qty	2.0000

Product Details

Country of Origin	China
Product Material	Mfc Smooth Matt
Colour/Finish	Coastal Grey
Mount Type	Wall Hung
Style	Contemporary
Handle Type	D Shape
Fixings Included	Yes
Construction Method	Cam & Wood Dowel
Construction Type	Rigid
Drawer Type	80mm High Metal S/C Inc Gallery
Fascia Finish	Mfc Smooth Matt
Fsc Certified	Yes
Handles Included	Yes
Material Thickness	18 mm
No. Drawers	2
Waste Shroud	No

© ROXOR Group