Sales Code: LIL2325W-S

Barcode: 5064007070829

Brand: nuie

Description: nuie Lille Coastal Grey 800mm 1 Drawer Wall Hung Vanity Unit With Co-ordinating Worktop and Shelf

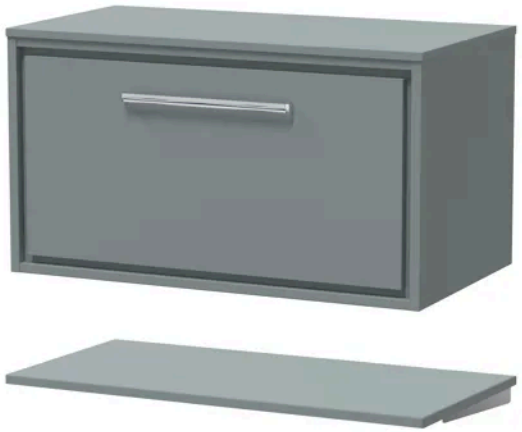

Technical Drawing Not Available

Product Dimensions

Product	449 x 805 x 460mm (H x W x D)
Packaged	470 x 820 x 480mm (H x W x D)
Nett Weight	33 kg
Packaged Weight	33.5 kg

Product Details

Country of Origin	China
Product Material	Mfc Smooth Matt
Colour/Finish	Coastal Grey
Mount Type	Wall Hung
Style	Contemporary
Handle Type	D Shape
Fixings Included	Yes
Construction Method	Cam & Wood Dowel
Construction Type	Rigid
Drawer Type	80mm High Metal S/C Inc Gallery
Fascia Finish	Mfc Smooth Matt
Fsc Certified	Yes
Handles Included	Yes
Material Thickness	18 mm
No. Doors	1
No. Drawers	1
No. Shelves	1
Number Of Shelves	1
Waste Shroud	Yes

© ROXOR Group

Sales Code: 154048SB **Barcode:** 5056462654942 **Brand:** nuie **Description:** Dark Grey Shelf Support Brackets



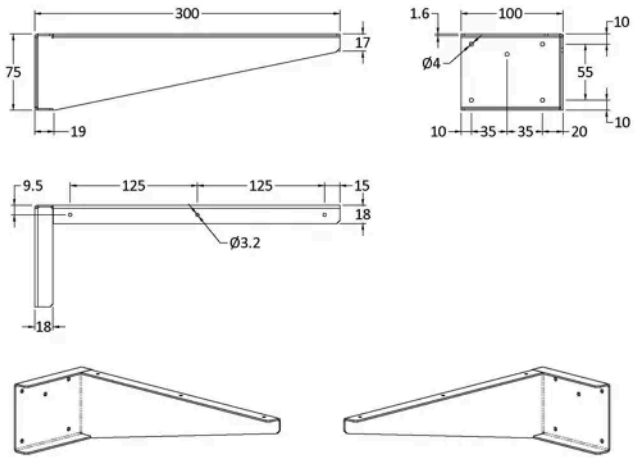

Product Dimensions

Product	300 x 100 x 50mm (H x W x D)
Packaged	90 x 130 x 330mm (H x W x D)
Nett Weight	0.72 kg
Packaged Weight	0.72 kg

Product Details

Country of Origin	China
Product Material	Stainless Steel
Colour/Finish	Dark Grey
Style	Contemporary

© ROXOR Group

Sales Code: MWT23860 **Barcode:** 5056817715373 **Brand:** Hudson Reed **Description:** Hudson Reed Coastal Grey 805x460mm Monument Worktop



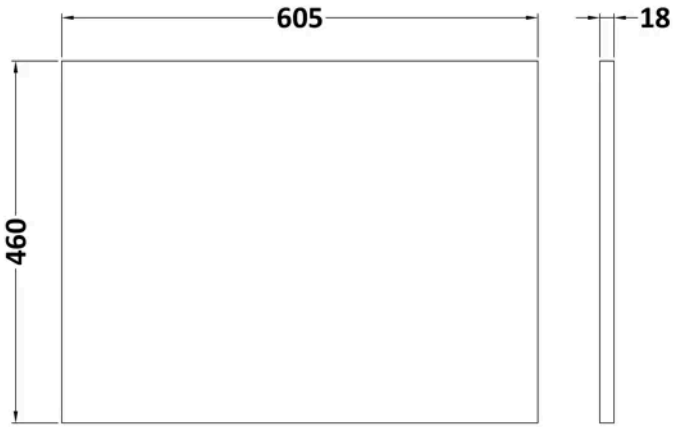

Product Dimensions

Packaged	25 x 825 x 410mm (H x W x D)
Nett Weight	3.5 kg
Packaged Weight	3.5 kg

Packaging Details

Box Qty	1

Product Details

Country of Origin	United Kingdom
Colour/Finish	Coastal Grey
Style	Contemporary
Material Thickness	18 mm

© ROXOR Group

Sales Code: NFF2325 **Barcode:** 5056678424025 **Brand:** nuie **Description:** nuie Lille 800mm Coastal Grey 1 Drawer Wall Hung Vanity Unit

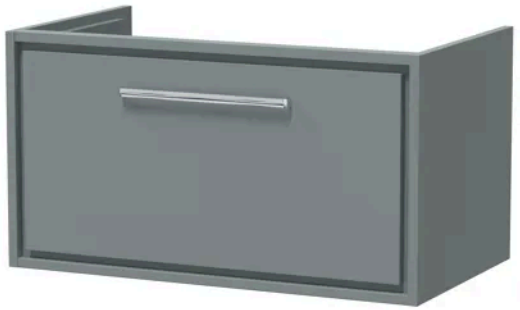

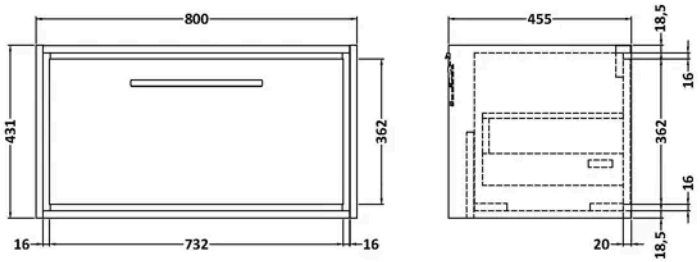

Product Dimensions

Product	431 x 800 x 455mm (H x W x D)
Packaged	470 x 832 x 480mm (H x W x D)
Nett Weight	30 kg
Packaged Weight	30.5 kg

Packaging Details

Box Qty	1
Label Colour	White
Label Qty	2.0000

Product Details

Country of Origin	China
Product Material	Mfc Smooth Matt
Colour/Finish	Coastal Grey
Mount Type	Wall Hung
Style	Contemporary
Handle Type	D Shape
Fixings Included	Yes
Construction Method	Cam & Wood Dowel
Construction Type	Rigid
Drawer Type	80mm High Metal S/C Inc Gallery
Fascia Finish	Mfc Smooth Matt
Fsc Certified	Yes
Handles Included	Yes
Material Thickness	18 mm
No. Drawers	1
Waste Shroud	Yes

© ROXOR Group