**Sales Code:** LIL2226Q

**Barcode:** 5056817719272

**Brand:** nuie

**Description:** nuie Lille Graphite Grey Woodgrain 800mm 2 Drawer Wall Hung Vanity Unit With 1 Tap Hole Stone Basin



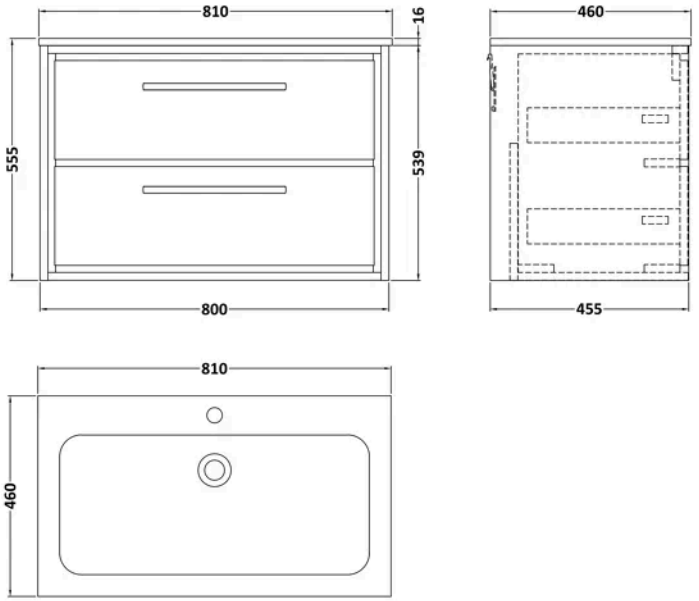


## Product Dimensions

| | |
|---|---|
| Product | 606 x 830 x 471mm (H x W x D) |
| Packaged | 577 x 820 x 480mm (H x W x D) |
| Nett Weight | 56 kg |
| Packaged Weight | 56 kg |

## Product Details

| | |
|---|---|
| Country of Origin | China |
| Product Material | Mfc Textured Woodgrain,Stone |
| Colour/Finish | Graphite Grey Woodgrain |
| Mount Type | Wall Hung |
| Style | Contemporary |
| Handle Type | D Shape |
| Fixings Included | Yes |
| Construction Method | Cam & Wood Dowel |
| Construction Type | Rigid |
| Drawer Type | 80mm High Metal S/C Inc Gallery |
| Fascia Finish | Mfc Textured Woodgrain |
| Fsc Certified | Yes |
| Handles Included | Yes |
| Inner Bowl Depth | 295 mm |
| Inner Bowl Height | 134 mm |
| Inner Bowl Width | 680 mm |
| Leg Set Included | No |
| Material Thickness | 18 mm |
| No. Doors | 2 |
| No. Drawers | 2 |
| No. Of Tapholes | 1 |
| Number Of Bowls | 1 |
| Overflow Cover Included | Yes |
| Overflow Included | Yes |
| Tap Included | No |
| Waste Included | No |
| Waste Shroud | Yes |

© ROXOR Group

**Sales Code:** NFF2226 **Barcode:** 5056678485743 **Brand:** nuie **Description:** nuie Lille 800mm Graphite Grey Woodgrain 2 Drawer Wall Hung Vanity Unit



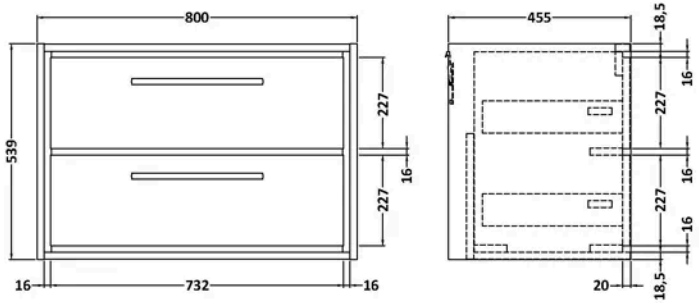


## Product Dimensions

| | |
|---|---|
| Product | 539 x 800 x 455mm (H x W x D) |
| Packaged | 577 x 832 x 480mm (H x W x D) |
| Nett Weight | 39 kg |
| Packaged Weight | 39.5 kg |

## Packaging Details

| | |
|---|---|
| Box Qty | 1 |
| Label Colour | White |
| Label Qty | 2.0000 |

## Product Details

| | |
|---|---|
| Country of Origin | China |
| Product Material | Mfc Textured Woodgrain |
| Colour/Finish | Graphite Grey Woodgrain |
| Mount Type | Wall Hung |
| Style | Contemporary |
| Handle Type | D Shape |
| Fixings Included | Yes |
| Construction Method | Cam & Wood Dowel |
| Construction Type | Rigid |
| Drawer Type | 80mm High Metal S/C Inc Gallery |
| Fascia Finish | Mfc Textured Woodgrain |
| Fsc Certified | Yes |
| Handles Included | Yes |
| Material Thickness | 18 mm |
| No. Drawers | 2 |
| Waste Shroud | Yes |

© ROXOR Group

**Sales Code:** SBM905 **Barcode:** 5056678424339 **Brand:** nuie **Description:** 800mm 1 Tap Hole Carrera Marble Stone Furniture Basin



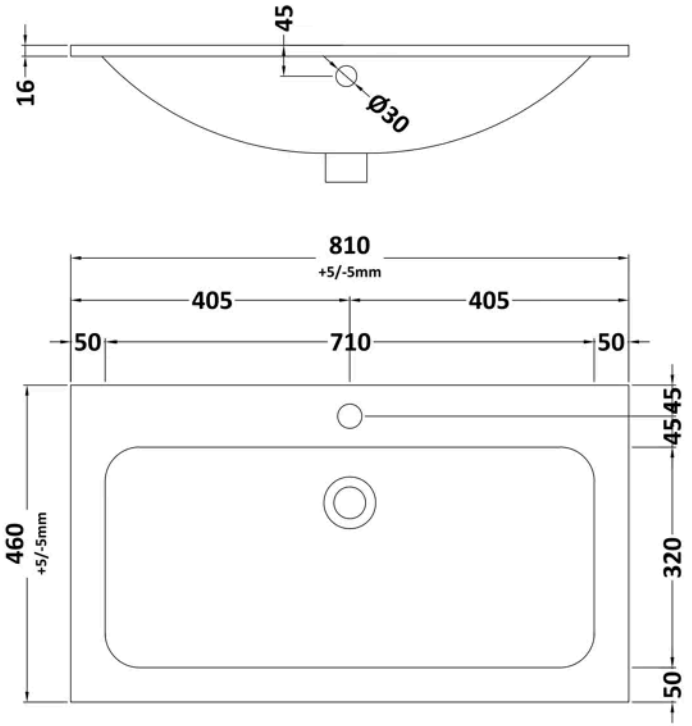


## Product Dimensions

| | |
|---|---|
| Product | 810 x 460mm (W x D) |
| Packaged | 200 x 875 x 530mm (H x W x D) |
| Nett Weight | 16 kg |
| Packaged Weight | 16.5 kg |

## Packaging Details

| | |
|---|---|
| Box Qty | 1 |

## Product Details

| | |
|---|---|
| Country of Origin | China |
| Product Material | Stone |
| Colour/Finish | Carrera Marble |
| Style | Contemporary |
| Bottle Trap Included | No |
| Ce Certified | Yes |
| Inner Bowl Depth | 320 mm |
| Inner Bowl Height | 128 mm |
| Inner Bowl Width | 710 mm |
| No. Of Tapholes | 1 |
| Number Of Bowls | 1 |
| Overflow Cover Included | Yes |
| Overflow Included | Yes |
| Tap Included | No |
| Waste Included | No |

© ROXOR Group