Sales Code: LFL3222WS2

Barcode: 5056817771744

Brand: nuie Lux

Description: nuie lux Flume 1200mm Pebble Grey 2 Drawer Wall Hung Vanity With Twin Marble Basin



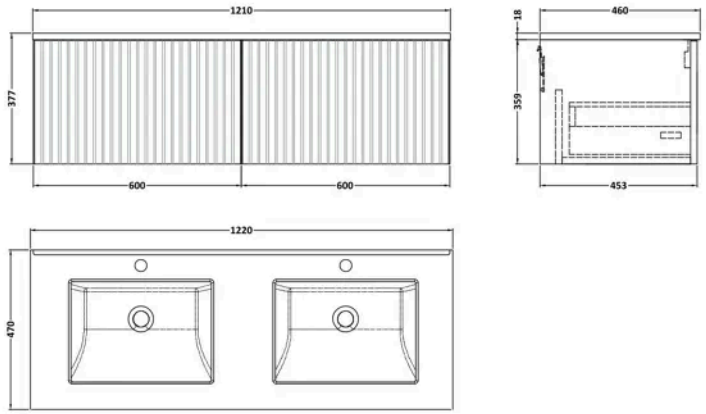

Product Dimensions

Product	373 x 1205 x 460mm (H x W x D)
Packaged	550 x 550 x 550mm (H x W x D)
Nett Weight	57 kg
Packaged Weight	57 kg

Product Details

Country of Origin	United Kingdom
Product Material	Mfc Smooth Matt,Vitreous China
Colour/Finish	Pebble Grey
Mount Type	Floor
Style	Contemporary
Construction Method	Cam & Wood Dowel
Construction Type	Rigid
Fascia Finish	Mdf Vinyl Smooth Matt
Handles Included	No
Inner Bowl Height	160 mm
Material Thickness	18 mm
No. Drawers	1
No. Of Tapholes	1
Number Of Bowls	2
Overflow Included	No
Tap Included	No
Waste Included	No

© ROXOR Group

Sales Code: LFL3222 **Barcode:** 5056817711962 **Brand:** nuie Lux **Description:** nuie lux Flume 600mm Pebble Grey 1 Drawer Vanity Unit

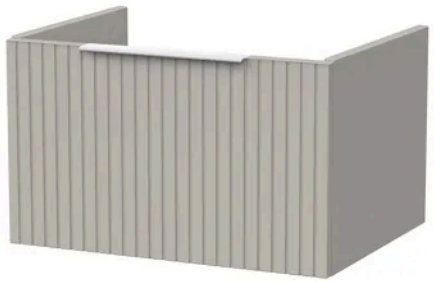

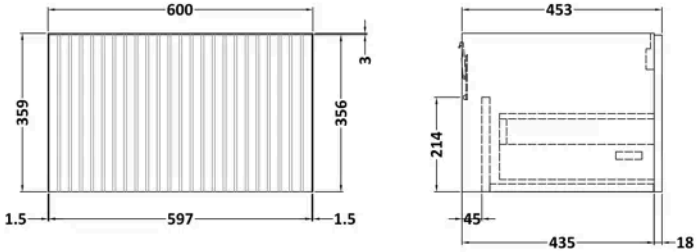

Product Dimensions

Product	359 x 600 x 455mm (H x W x D)
Packaged	380 x 620 x 405mm (H x W x D)
Nett Weight	12.5 kg
Packaged Weight	13 kg

Product Details

Country of Origin	United Kingdom
Product Material	Mfc Smooth Matt
Colour/Finish	Pebble Grey
Mount Type	Floor
Style	Contemporary
Construction Method	Cam & Wood Dowel
Construction Type	Rigid
Drawer Type	80mm High Metal S/C Inc Gallery
Fascia Finish	Mdf Vinyl Smooth Matt
Handles Included	No
Material Thickness	18 mm
No. Drawers	1
Waste Shroud	Yes

© ROXOR Group

Sales Code: LXMB234 **Barcode:** 5056817728212 **Brand:** nuie Lux **Description:** nuie lux 1 Tap Hole 1200mm White Double Bowl Marble Worktop Basin



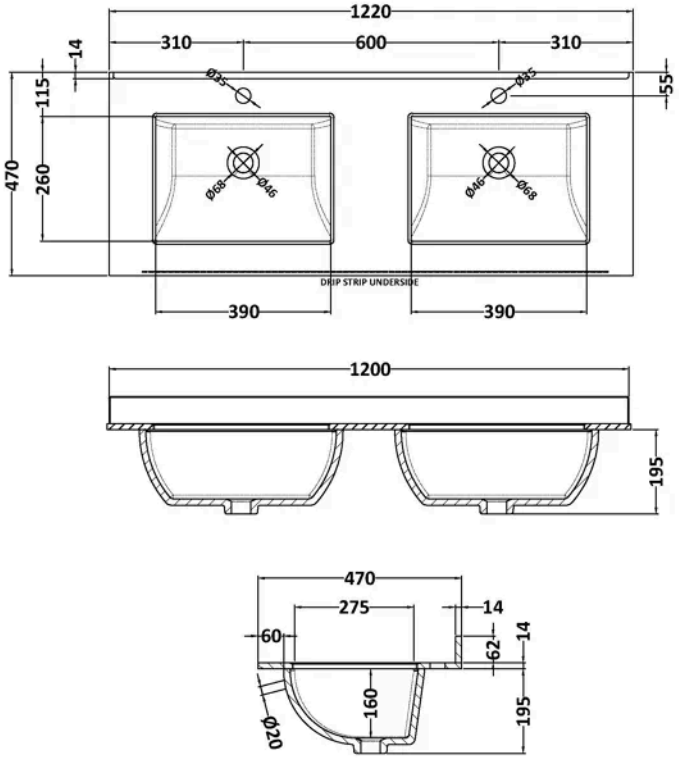

Product Dimensions

Product	209 x 1220 x 470mm (H x W x D)
Packaged	250 x 1320 x 580mm (H x W x D)
Nett Weight	30.5 kg
Packaged Weight	31 kg

Packaging Details

Label Size (mm)	50 x 100
Label Colour	White
Label Qty	2.0000

Product Details

Country of Origin	China
Product Material	Vitreous China
Colour/Finish	White
Style	Traditional
Bottle Trap Included	No
Ce Certified	Yes
Inner Bowl Depth	260 mm
Inner Bowl Height	160 mm
Inner Bowl Width	390 mm
No. Of Tapholes	1
Number Of Bowls	2
Overflow Cover Included	No
Overflow Included	Yes
Tap Included	No
Waste Included	No

© ROXOR Group