**Sales Code:** LFL3205LCM

**Barcode:** 5056817770648

**Brand:** nuie Lux

**Description:** nuie lux Flume 800mm Pebble Grey 2 Door Floor Standing Vanity Unit With Carrara Laminate Worktop



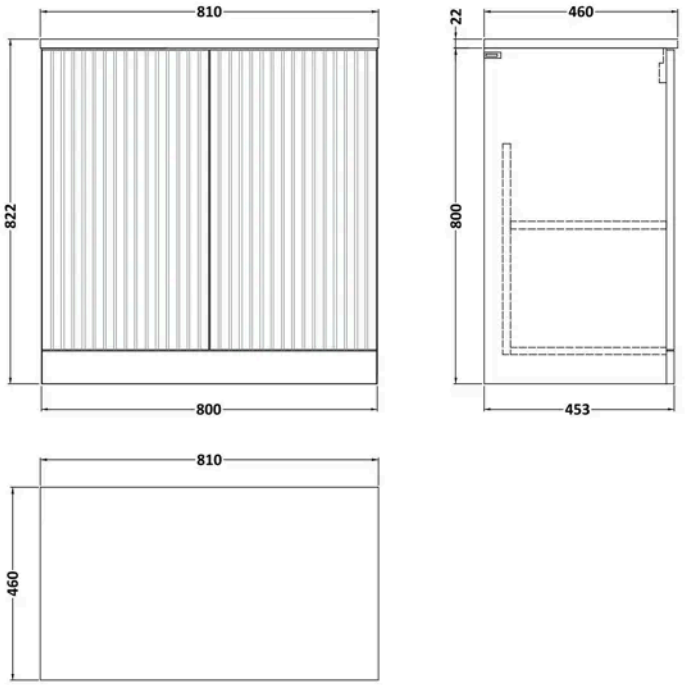


## Product Dimensions

| | |
|---|---|
| Product | 818 x 805 x 460mm (H x W x D) |
| Packaged | 550 x 550 x 550mm (H x W x D) |
| Nett Weight | 29 kg |
| Packaged Weight | 29 kg |

## Product Details

| | |
|---|---|
| Country of Origin | United Kingdom |
| Product Material | Mfc Laminated,Mfc Smooth Matt |
| Colour/Finish | Pebble Grey |
| Mount Type | Floor |
| Style | Contemporary |
| Construction Method | Cam & Wood Dowel |
| Construction Type | Rigid |
| Fascia Finish | Mdf Vinyl Smooth Matt |
| Handles Included | No |
| Material Thickness | 18 mm |
| No. Doors | 2 |
| No. Shelves | 1 |
| Number Of Shelves | 1 |

© ROXOR Group

**Sales Code:** LFL3205 **Barcode:** 5056817713416 **Brand:** nuie Lux **Description:** nuie lux Flume 800mm Pebble Grey 2 Door Floor Standing Vanity Unit

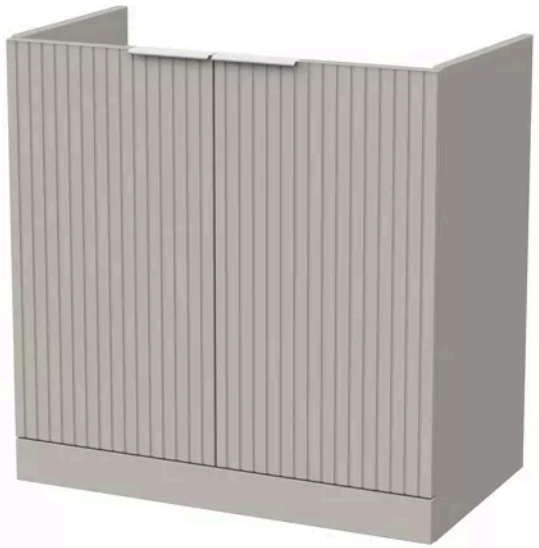

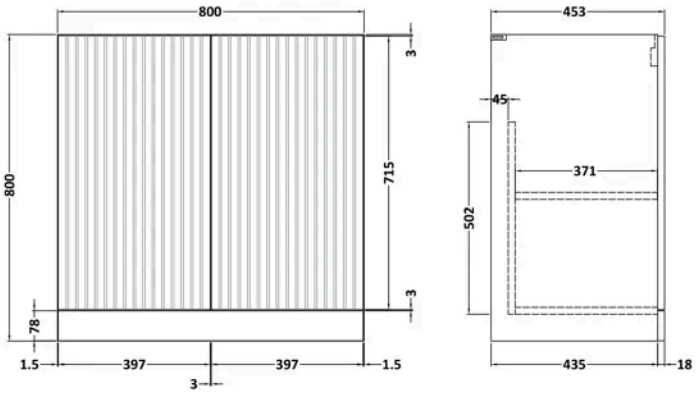


## Product Dimensions

| | |
|---|---|
| Product | 800 x 800 x 455mm (H x W x D) |
| Packaged | 820 x 820 x 405mm (H x W x D) |
| Nett Weight | 25.5 kg |
| Packaged Weight | 26 kg |

## Packaging Details

| | |
|---|---|
| Box Qty | 1 |

## Product Details

| | |
|---|---|
| Country of Origin | United Kingdom |
| Product Material | Mfc Smooth Matt |
| Colour/Finish | Pebble Grey |
| Mount Type | Floor |
| Style | Contemporary |
| Construction Method | Cam & Wood Dowel |
| Construction Type | Rigid |
| Fascia Finish | Mdf Vinyl Smooth Matt |
| Handles Included | No |
| Material Thickness | 18 mm |
| No. Doors | 2 |
| No. Shelves | 1 |
| Number Of Shelves | 1 |
| Waste Shroud | No |

© ROXOR Group

**Sales Code:** LX8046CM **Barcode:** 5056817726263 **Brand:** nuie Lux **Description:** nuie lux 805 x 460mm Carrera Marble Laminate Worktop



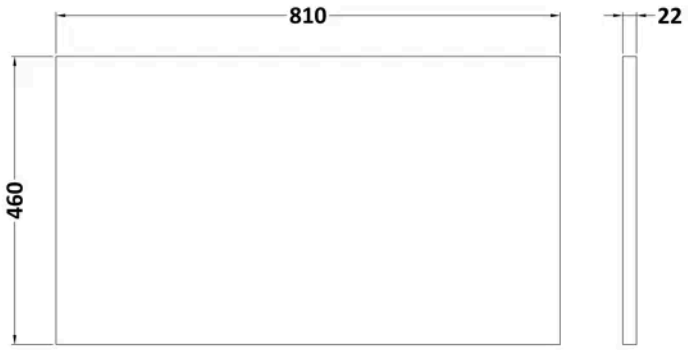


## Product Dimensions

| | |
|---|---|
| Product | 22 x 805 x 460mm (H x W x D) |
| Packaged | 20 x 520 x 810mm (H x W x D) |
| Nett Weight | 3 kg |
| Packaged Weight | 3 kg |

## Packaging Details

| | |
|---|---|
| Box Qty | 1 |

## Product Details

| | |
|---|---|
| Country of Origin | United Kingdom |
| Product Material | Mfc Laminated |
| Colour/Finish | Carrera Marble |
| Style | Contemporary |

© ROXOR Group