Sales Code: LFL3203H **Barcode:** 5056817769536 **Brand:** nuie Lux **Description:** nuie lux Flume 600mm Pebble Grey 2 Door Floor Standing Vanity Unit With Fireclay Basin

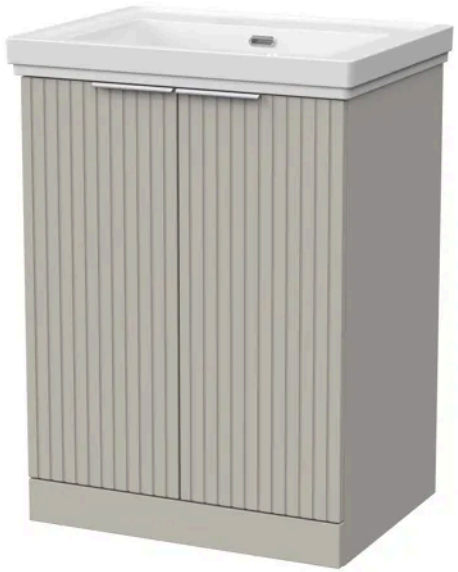

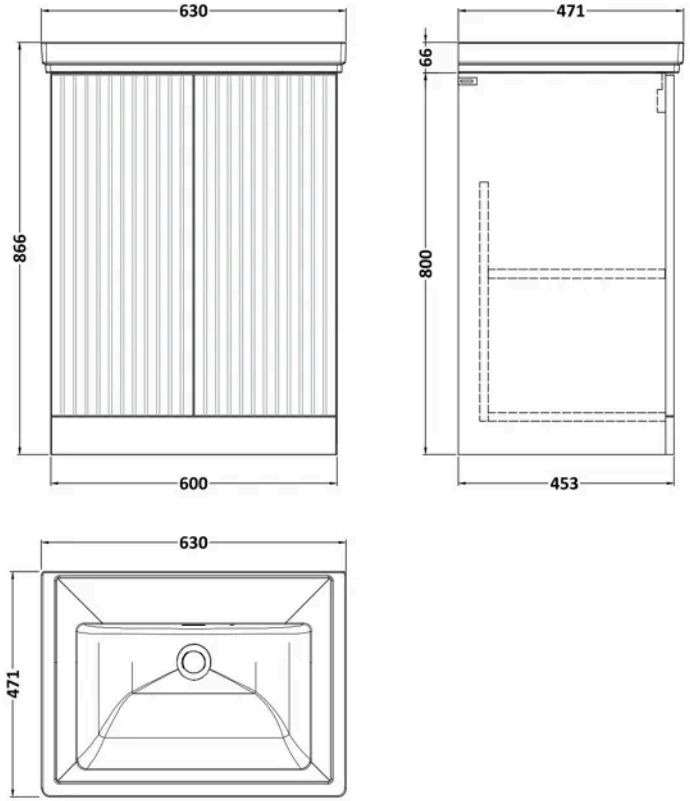

Product Dimensions

Product	866 x 605 x 460mm (H x W x D)
Packaged	550 x 550 x 550mm (H x W x D)
Nett Weight	37 kg
Packaged Weight	37 kg

Product Details

Country of Origin	United Kingdom
Product Material	Fireclay,Mfc Smooth Matt
Colour/Finish	Pebble Grey
Mount Type	Floor
Style	Contemporary
Construction Method	Cam & Wood Dowel
Construction Type	Rigid
Fascia Finish	Mdf Vinyl Smooth Matt
Handles Included	No
Inner Bowl Height	135 mm
Material Thickness	18 mm
No. Doors	2
No. Of Tapholes	No Tapholes
No. Shelves	1
Number Of Bowls	1
Number Of Shelves	1
Overflow Included	Yes
Tap Included	No
Waste Included	No

© ROXOR Group

Sales Code: LFL3203 **Barcode:** 5056817711955 **Brand:** nuie Lux **Description:** nuie lux Flume 600mm Pebble Grey 2 Door Floor Standing Vanity Unit

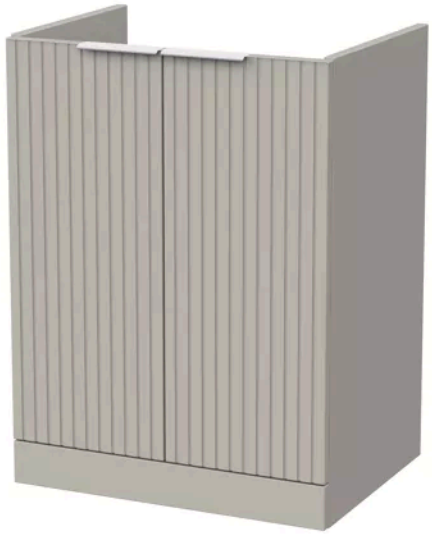

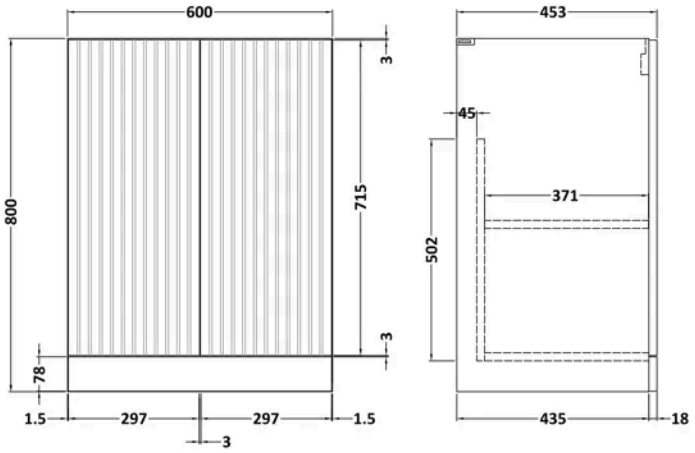

Product Dimensions

Product	800 x 600 x 455mm (H x W x D)
Packaged	820 x 620 x 405mm (H x W x D)
Nett Weight	19.5 kg
Packaged Weight	20 kg

Product Details

Country of Origin	United Kingdom
Product Material	Mfc Smooth Matt
Colour/Finish	Pebble Grey
Mount Type	Floor
Style	Contemporary
Construction Method	Cam & Wood Dowel
Construction Type	Rigid
Fascia Finish	Mdf Vinyl Smooth Matt
Handles Included	No
Material Thickness	18 mm
No. Doors	2
No. Shelves	1
Number Of Shelves	1
Waste Shroud	No

© ROXOR Group

Sales Code: LXCB513 **Barcode:** 5056817727956 **Brand:** nuie Lux **Description:** nuie lux 0 Tap Hole 600mm Traditional Fireclay Basin



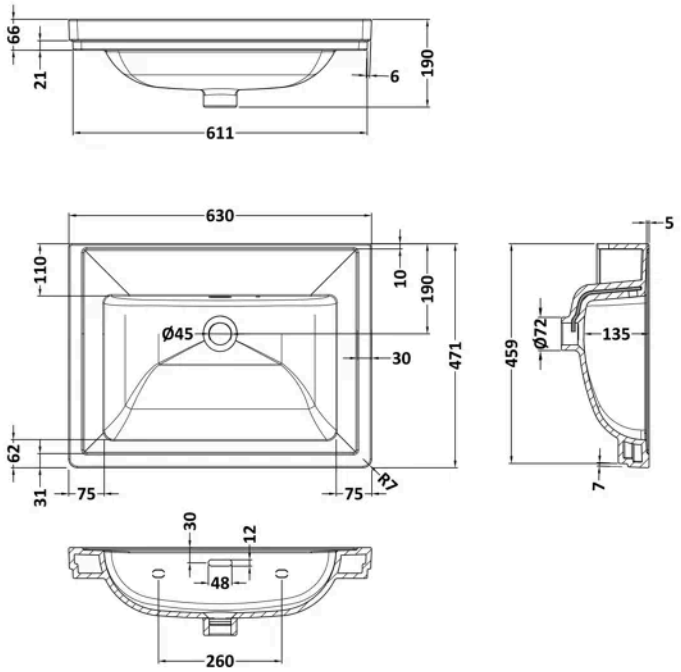

Product Dimensions

Product	190 x 630 x 471mm (H x W x D)
Packaged	490 x 650 x 220mm (H x W x D)
Nett Weight	17 kg
Packaged Weight	17 kg

Packaging Details

Label Size (mm)	50 x 100
Label Colour	White
Label Qty	2.0000

Product Details

Country of Origin	United Arab Emirates
Product Material	Fireclay
Colour/Finish	White
Style	Contemporary
Bottle Trap Included	No
Ce Certified	Yes
Inner Bowl Depth	300 mm
Inner Bowl Height	135 mm
Inner Bowl Width	480 mm
No. Of Tapholes	No Tapholes
Number Of Bowls	1
Overflow Cover Included	No
Overflow Included	Yes
Tap Included	No
Waste Included	No

© ROXOR Group