Sales Code: LFL3126K

Barcode: 5056817775605

Brand: nuie Lux

Description: nuie lux Flume 800mm Fern Green 2 Drawer Wall Hung Vanity Unit With Fireclay Square Basin



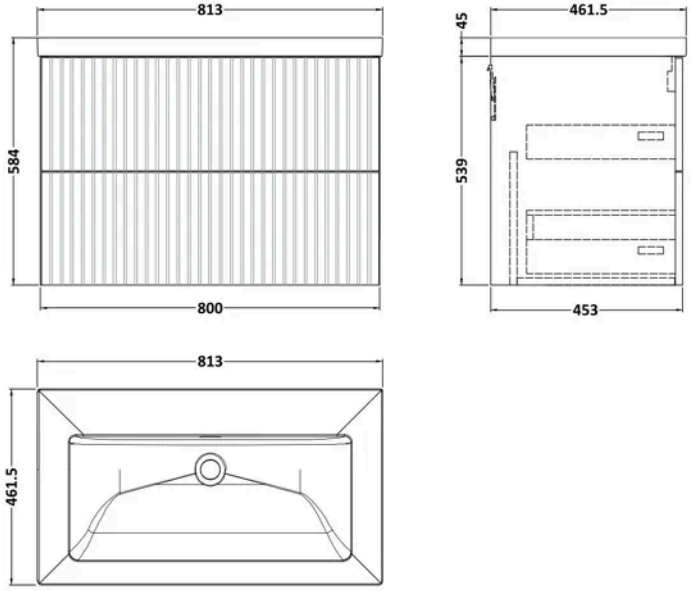

Product Dimensions

Product	584 x 805 x 460mm (H x W x D)
Packaged	550 x 550 x 550mm (H x W x D)
Nett Weight	45.5 kg
Packaged Weight	45.5 kg

Product Details

Country of Origin	United Kingdom
Product Material	Fireclay,Mfc Smooth Matt
Colour/Finish	Fern Green
Mount Type	Wall Hung
Style	Contemporary
Construction Method	Cam & Wood Dowel
Construction Type	Rigid
Fascia Finish	Mdf Vinyl Smooth Matt
Handles Included	No
Inner Bowl Height	134 mm
Material Thickness	18 mm
No. Drawers	2
No. Of Tapholes	No Tapholes
Number Of Bowls	1
Overflow Included	Yes
Tap Included	No
Waste Included	No

© ROXOR Group

Sales Code: LFL3126 **Barcode:** 5056817712082 **Brand:** nuie Lux **Description:** nuie lux Flume 800mm Fern Green 2 Drawer Wall Hung Vanity Unit

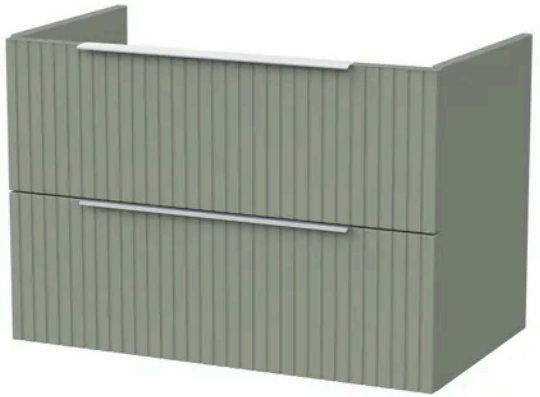

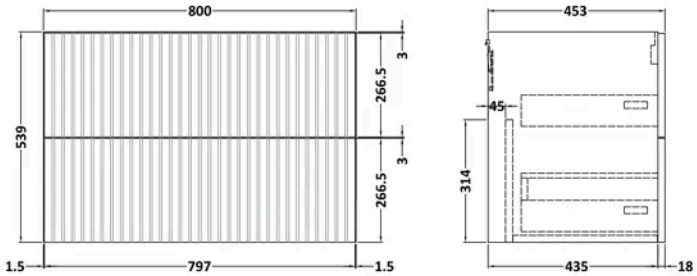

Product Dimensions

Product	539 x 800 x 455mm (H x W x D)
Packaged	560 x 820 x 405mm (H x W x D)
Nett Weight	23.5 kg
Packaged Weight	24 kg

Packaging Details

Box Qty	1

Product Details

Country of Origin	United Kingdom
Product Material	Mfc Smooth Matt
Colour/Finish	Fern Green
Mount Type	Wall Hung
Style	Contemporary
Construction Method	Cam & Wood Dowel
Construction Type	Rigid
Drawer Type	80mm High Metal S/C Inc Gallery
Fascia Finish	Mdf Vinyl Smooth Matt
Handles Included	No
Material Thickness	18 mm
No. Drawers	2
Waste Shroud	Yes

© ROXOR Group

Sales Code: LXCB615 **Barcode:** 5056817728045 **Brand:** nuie Lux **Description:** nuie lux 0 Tap Hole 800mm Contemporary Fireclay Basin



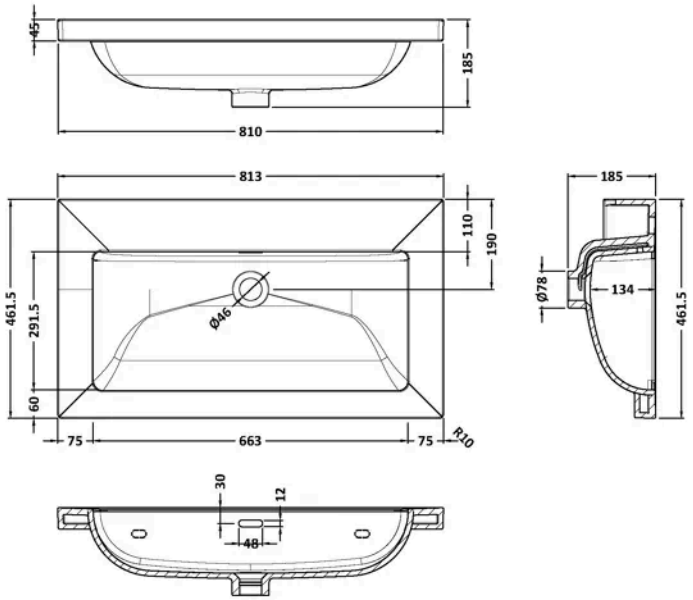

Product Dimensions

Product	45 x 810 x 460mm (H x W x D)
Packaged	490 x 850 x 220mm (H x W x D)
Nett Weight	21.5 kg
Packaged Weight	21.5 kg

Packaging Details

Box Qty	1
Label Size (mm)	100 x 50
Label Colour	White
Label Qty	2.0000

Product Details

Country of Origin	United Arab Emirates
Product Material	Fireclay
Colour/Finish	White
Style	Contemporary
Fixings Included	No
Bottle Trap Included	No
Ce Certified	Yes
Inner Bowl Depth	295 mm
Inner Bowl Height	134 mm
Inner Bowl Width	680 mm
No. Of Tapholes	No Tapholes
Number Of Bowls	1
Overflow Cover Included	No
Overflow Included	Yes
Tap Included	No
Waste Included	No

© ROXOR Group