Sales Code: LFL3103W

Barcode: 5056817769826

Brand: nuie Lux

Description: nuie lux Flume 600mm Fern Green 2 Door Floor Standing Vanity Unit With Co-ordinating Worktop



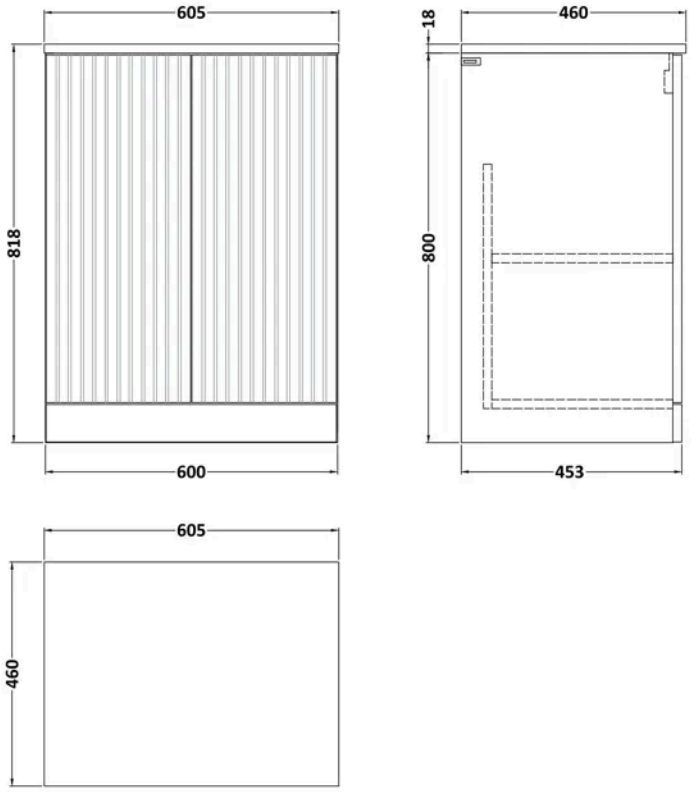

Product Dimensions

Product	818 x 605 x 460mm (H x W x D)
Packaged	550 x 550 x 550mm (H x W x D)
Nett Weight	23 kg
Packaged Weight	23 kg

Product Details

Country of Origin	United Kingdom
Product Material	Mfc Smooth Matt
Colour/Finish	Fern Green
Mount Type	Floor
Style	Contemporary
Construction Method	Cam & Wood Dowel
Construction Type	Rigid
Fascia Finish	Mdf Vinyl Smooth Matt
Handles Included	No
Material Thickness	18 mm
No. Doors	2
No. Shelves	1
Number Of Shelves	1

© ROXOR Group

Sales Code: LFL3103 **Barcode:** 5056817712044 **Brand:** nuie Lux **Description:** nuie lux Flume 600mm Fern Green 2 Door Floor Standing Vanity Unit

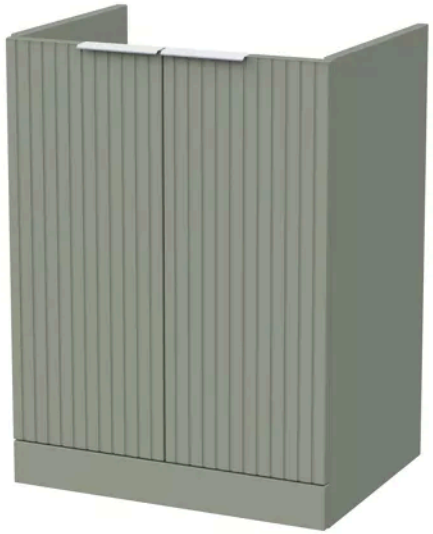

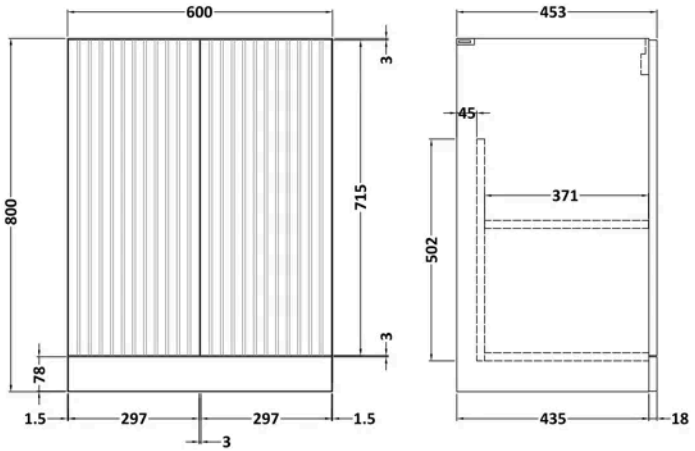

Product Dimensions

Product	800 x 600 x 455mm (H x W x D)
Packaged	820 x 620 x 405mm (H x W x D)
Nett Weight	19.5 kg
Packaged Weight	20 kg

Product Details

Country of Origin	United Kingdom
Product Material	Mfc Smooth Matt
Colour/Finish	Fern Green
Mount Type	Floor
Style	Contemporary
Construction Method	Cam & Wood Dowel
Construction Type	Rigid
Fascia Finish	Mdf Vinyl Smooth Matt
Handles Included	No
Material Thickness	18 mm
No. Doors	2
No. Shelves	1
Number Of Shelves	1
Waste Shroud	No

© ROXOR Group

Sales Code: MWD3160 **Barcode:** 5056678423677 **Brand:** Hudson Reed **Description:** 605 x 460mm Fern Green MFC Matt Furniture Worktop



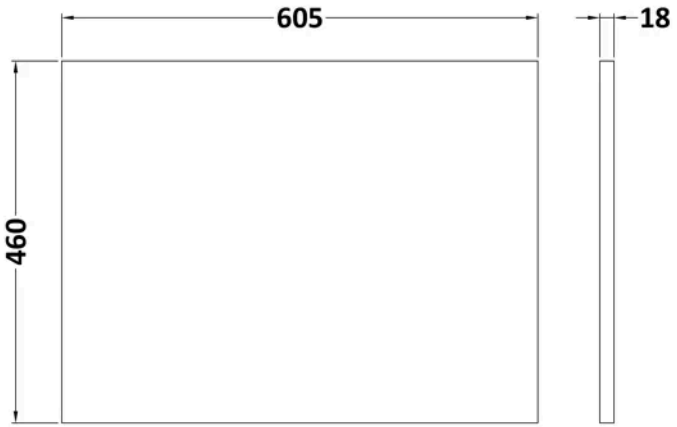

Product Dimensions

Product	18 x 605 x 460mm (H x W x D)
Packaged	25 x 625 x 410mm (H x W x D)
Nett Weight	2.5 kg
Packaged Weight	3 kg

Product Details

Country of Origin	United Kingdom
Product Material	Mfc Smooth Matt
Colour/Finish	Fern Green
Style	Contemporary
Material Thickness	18 mm

© ROXOR Group