Sales Code: LFL1826WS1

Barcode: 5056817776046

Brand: nuie Lux

Description: nuie lux Flume 800mm Autumn Oak 2 Drawer Wall Hung Vanity Unit With 1 Tap Hole Marble Worktop



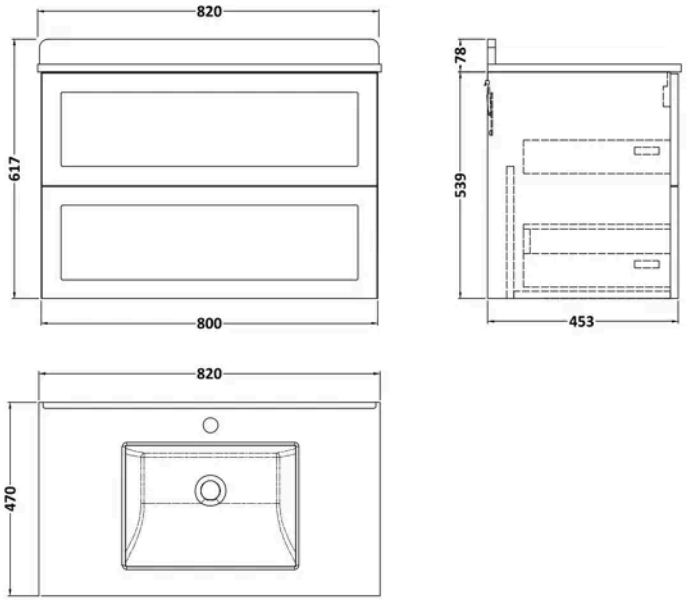

Product Dimensions

Product	553 x 805 x 460mm (H x W x D)
Packaged	553 x 805 x 460mm (H x W x D)
Nett Weight	45 kg
Packaged Weight	45 kg

Product Details

Country of Origin	United Kingdom
Product Material	Mfc Textured Woodgrain,Vitreous China
Colour/Finish	Autumn Oak
Mount Type	Wall Hung
Style	Contemporary
Construction Method	Cam & Wood Dowel
Construction Type	Rigid
Fascia Finish	Mdf Vinyl Textured Woodgrain
Handles Included	No
Inner Bowl Height	160 mm
Material Thickness	18 mm
No. Drawers	2
No. Of Tapholes	1
Number Of Bowls	1
Overflow Included	No
Tap Included	No
Waste Included	No

© ROXOR Group

Sales Code: LFL1826 **Barcode:** 5056817712266 **Brand:** nuie Lux **Description:** nuie lux Flume 800mm Autumn Oak 2 Drawer Wall Hung Vanity Unit



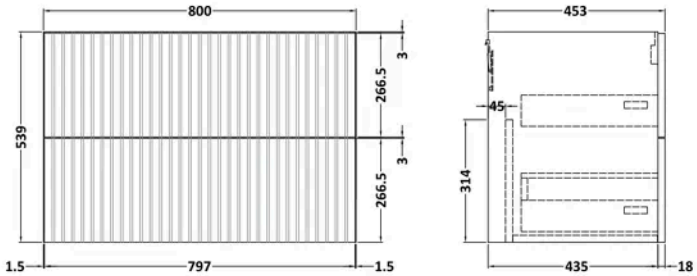

Product Dimensions

Product	539 x 800 x 455mm (H x W x D)
Packaged	560 x 820 x 405mm (H x W x D)
Nett Weight	23.5 kg
Packaged Weight	24 kg

Packaging Details

Box Qty	1

Product Details

Country of Origin	United Kingdom
Product Material	Mfc Textured Woodgrain
Colour/Finish	Autumn Oak
Mount Type	Wall Hung
Style	Contemporary
Construction Method	Cam & Wood Dowel
Construction Type	Rigid
Drawer Type	80mm High Metal S/C Inc Gallery
Fascia Finish	Mdf Vinyl Textured Woodgrain
Handles Included	No
Material Thickness	18 mm
No. Drawers	2
Waste Shroud	Yes

© ROXOR Group

Sales Code: LXMB228 **Barcode:** 5056817728205 **Brand:** nuie Lux **Description:** nuie lux 1 Tap Hole 800mm White Single Square Bowl Marble Worktop Basin



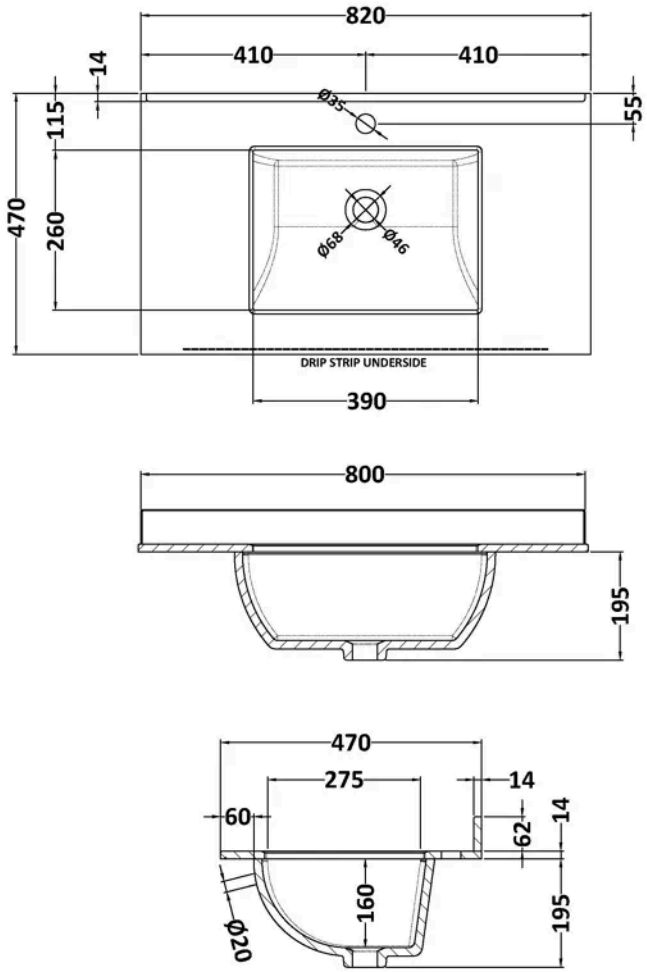

Product Dimensions

Product	209 x 820 x 463mm (H x W x D)
Packaged	250 x 900 x 580mm (H x W x D)
Nett Weight	20.5 kg
Packaged Weight	21 kg

Packaging Details

Box Qty	1
Label Size (mm)	50 x 100
Label Colour	White
Label Qty	2.0000

Product Details

Country of Origin	China
Product Material	Vitreous China
Colour/Finish	White
Style	Traditional
Bottle Trap Included	No
Ce Certified	Yes
Inner Bowl Depth	275 mm
Inner Bowl Height	160 mm
Inner Bowl Width	390 mm
No. Of Tapholes	1
Number Of Bowls	1
Overflow Cover Included	No
Overflow Included	Yes
Tap Included	No
Waste Included	No

© ROXOR Group